QuikR Wing
Illustrated Parts Catalogue

Contents

		Page No
YQE-000	QuikR General Assembly	2
YQE-001	QuikR Wing	4
YQE-002	QuikR Wing Folded	5
YQE-010	Keel Assembly	6
YQE-020	Leading Edge Assembly	7
YQE-030	Cross Boom Assembly	8
YQE-040	Control Frame	9
YQE-050	Wing Final Assembly	11
YQE-070	Inner Washout Rod Assembly	15
YQE-71000	Wing Ribs	16
YQD-080	Tip Fin Assembly	18
YQC-0401	Quik instructor Bar Assy	19

This manual should be used in conjunction with the Operators Manual. Some parts that are listed are not user serviceable. The following drawings are provided as a convenience to aid identification of parts for the ordering of spare parts from the factory. When ordering parts be sure to include the exact aircraft type and model, including engine number and aircraft registration/serial number, together with a description of the part and part number where applicable.

All drawings are copyright of P&M Aviation Ltd.

P&M AVIATION UNIT B CRAWFORD STREET ROCHDALE LANCASHIRE OL16 5NU UK
Tel: +44 (0) 1706 655134 Fax: +44 (0) 1706 631561
E Mail: flying@pmaviation.co.uk WEB : www.pmaviation.co.uk

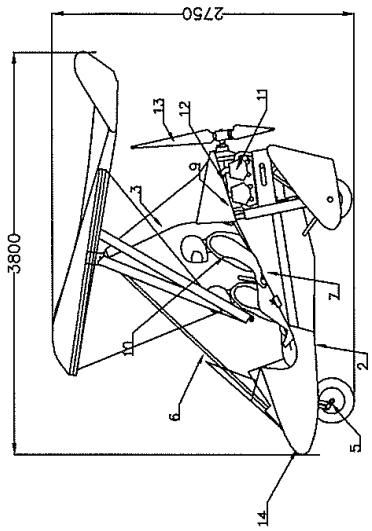

Key	Description	Drawing No
1	QUIKR WING	YQE-001
2	BASETUBE SUB ASSY	YQC-080
3	PYLON ASSY	YQC-090
4	MAIN SUBFRAME AND REAR U/C ASSY	SW-90250
5	FRONT U/C ASSY	SW-89250
6	FRONT STRUT ASSY	YQC-110
7	SEAT ASSY	SW-90253
8	BRAKE ASSY	YQC-130
9	FUEL SYSTEM ASSY	YQC-140
10	SEAT BELT ASSY	SW-90260
11	POWER PLANT ASSY	YQC-160
12	THROTTLE AND CHOKE ASSY	SW-90257
13	PROPELLER FITTING	YQC-180
14	FAIRINGS AND FRONT STRUT LOWER ASSY	YQC-200
15	PLACARDS	SW90314
16	LYNX COMMS FIT	LYNX-DWG-QTM
17	REAR STEERING BAR ASSY	SW-90252

Iss.	Description of revision	Date	Approved	Checked
A	INITIAL ISSUE	250105	WGB	

QUIKR general arrangement
SHEET 1 OF 2
DIM. IN mm | SCALE: NTS | PROJ.
GEN. TOL +-: 5mm

P&M AVIATION
Drawing/Part No.
YQE-000

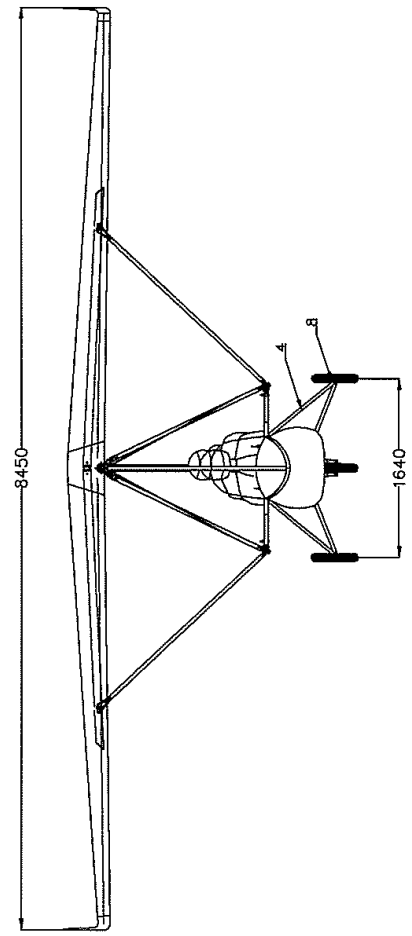

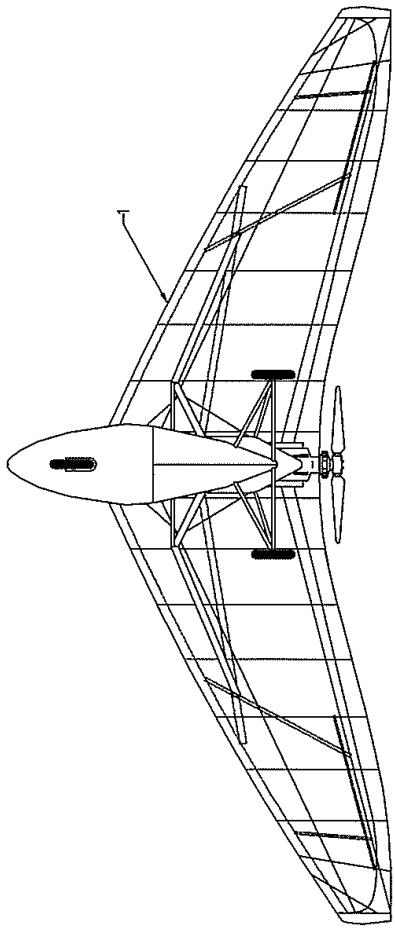

P&M AVIATION UNIT B CRAWFORD STREET ROCHDALE LANCASHIRE OL16 5NU UK
Tel: +44 (0) 1706 655134 Fax: +44 (0) 1706 631561
E Mail: flying@pmaviation.co.uk WEB : www.pmaviation.co.uk

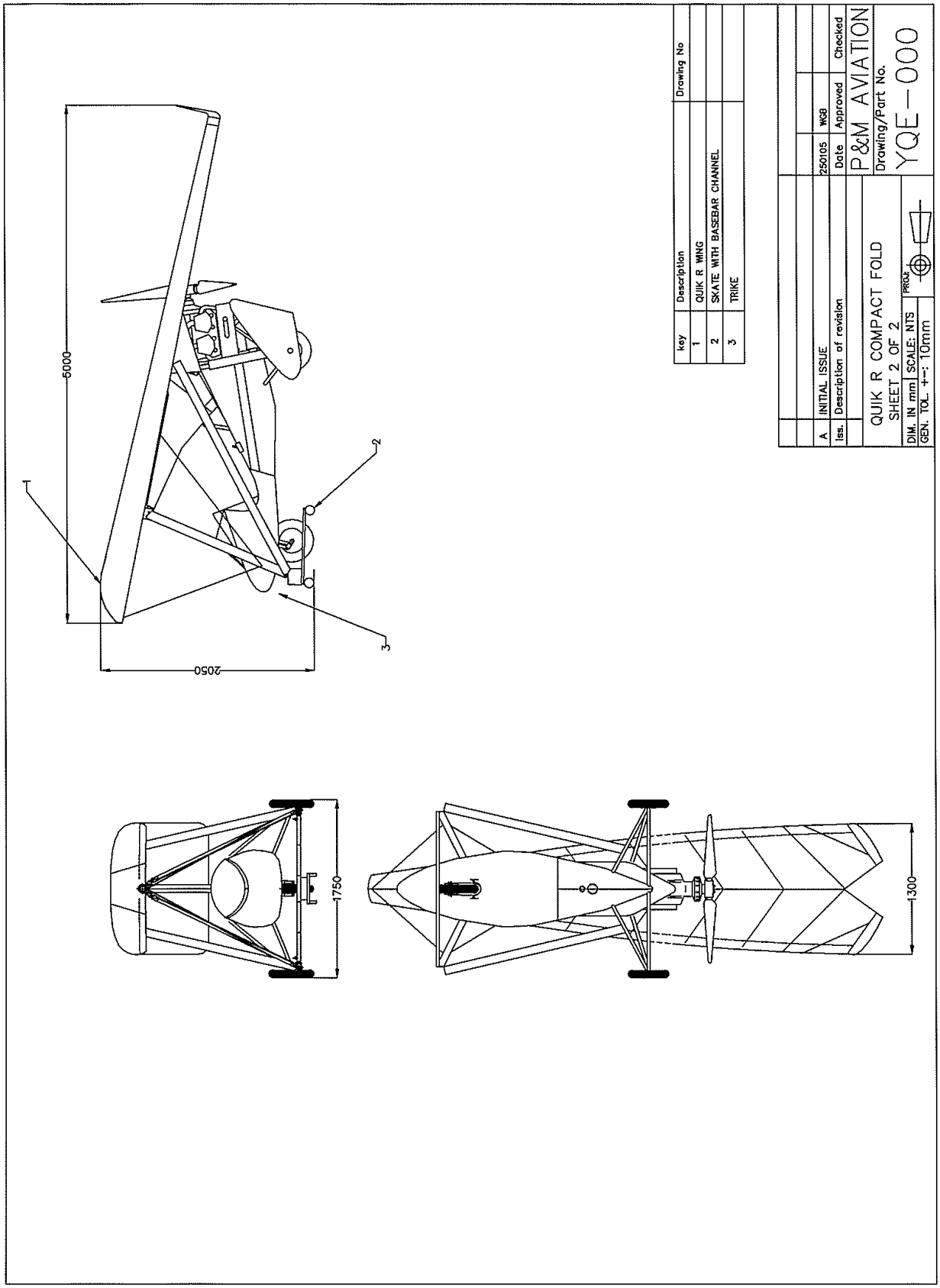

P&M AVIATION UNIT B CRAWFORD STREET ROCHDALE LANCASHIRE OL16 5NU UK
Tel: +44 (0) 1706 655134 Fax: +44 (0) 1706 631561
E Mail: flying@pmaviation.co.uk WEB : www.pmaviation.co.uk

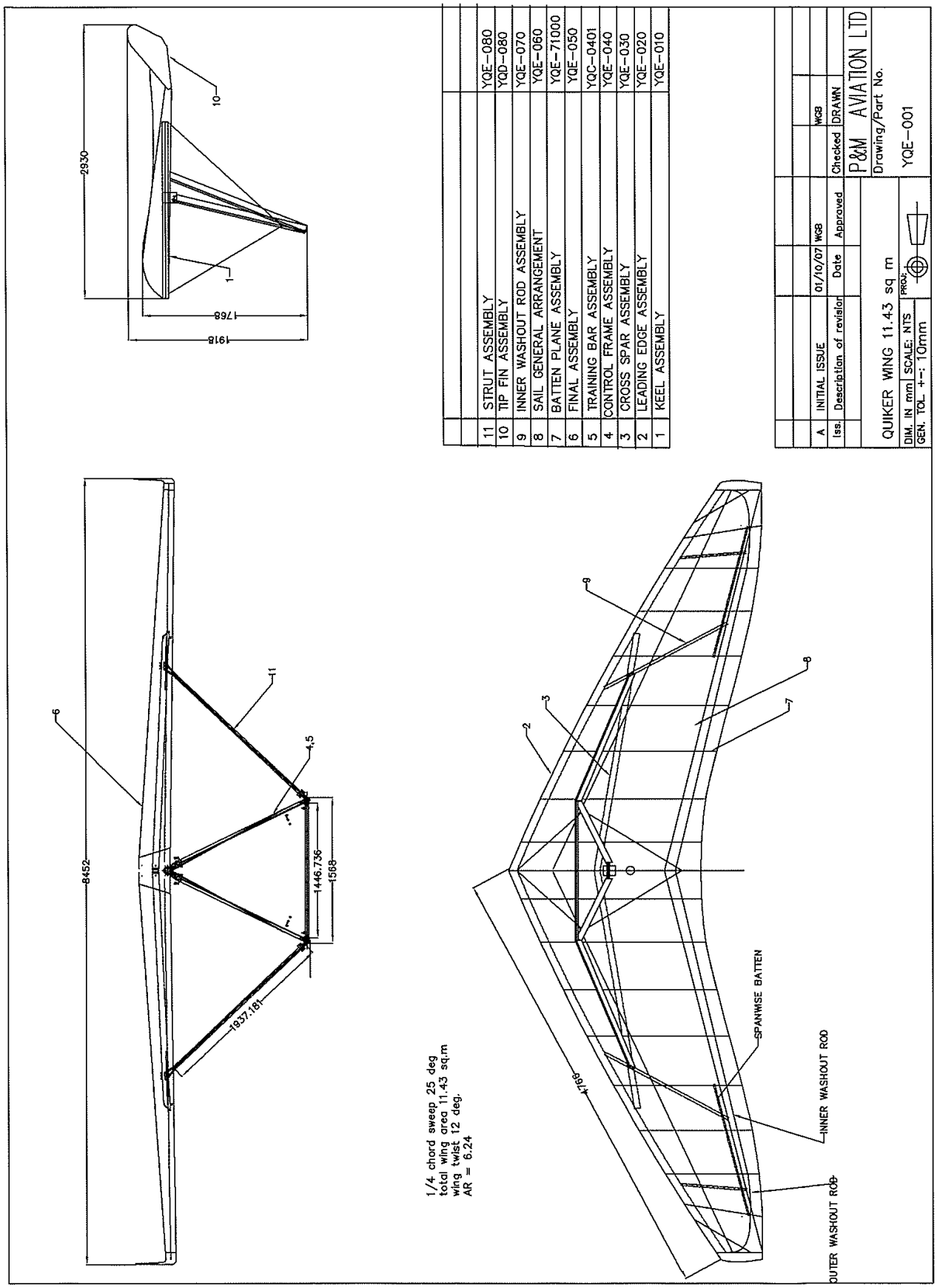

P&M AVIATION UNIT B CRAWFORD STREET ROCHDALE LANCASHIRE OL16 5NU UK
Tel: +44 (0) 1706 655134 Fax: +44 (0) 1706 631561
E Mail: flying@pmaviation.co.uk WEB : www.pmaviation.co.uk

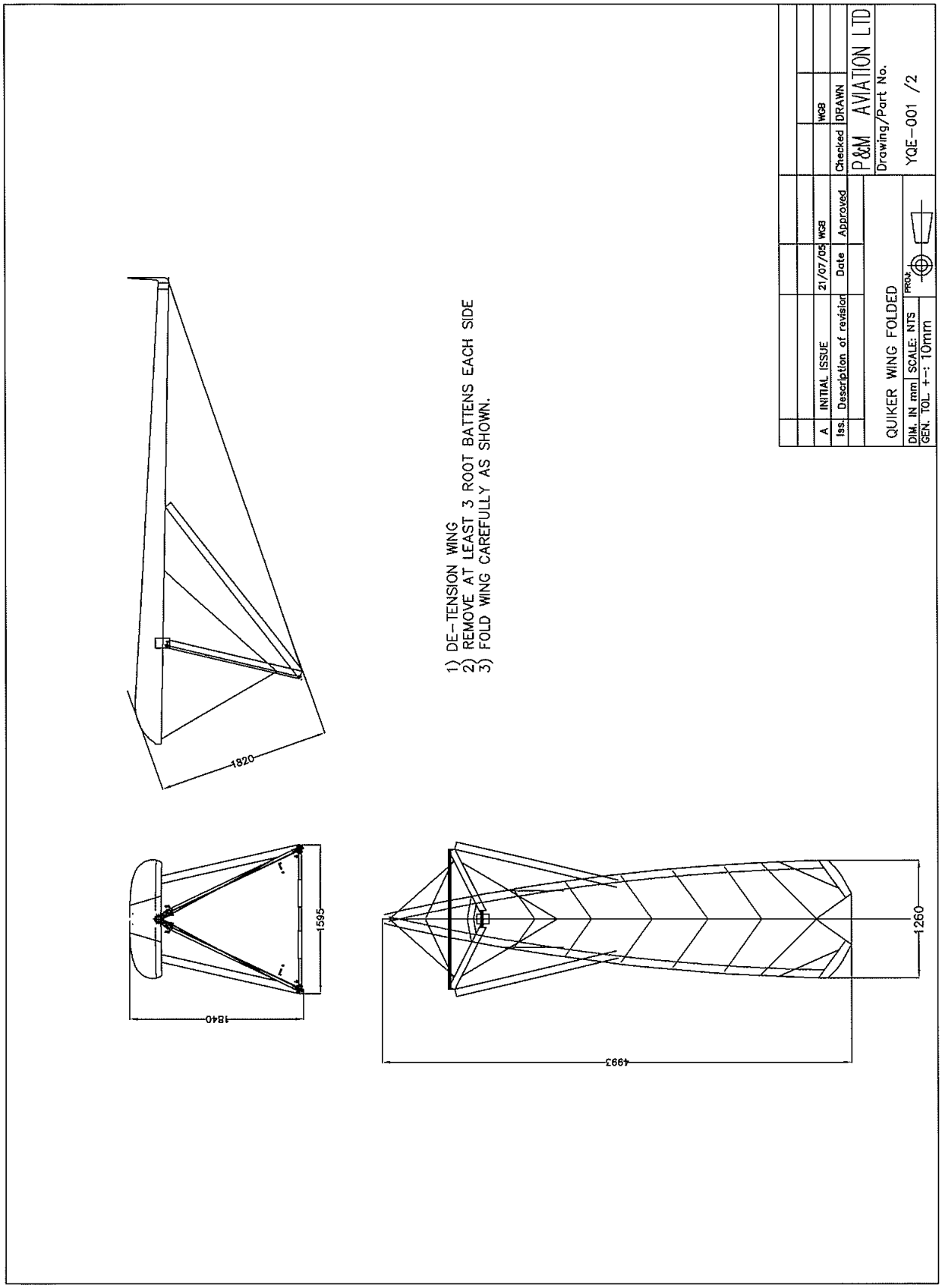

P&M AVIATION UNIT B CRAWFORD STREET ROCHDALE LANCASHIRE OL16 5NU UK
Tel: +44 (0) 1706 655134 Fax: +44 (0) 1706 631561
E Mail: flying@pmaviation.co.uk WEB : www.pmaviation.co.uk

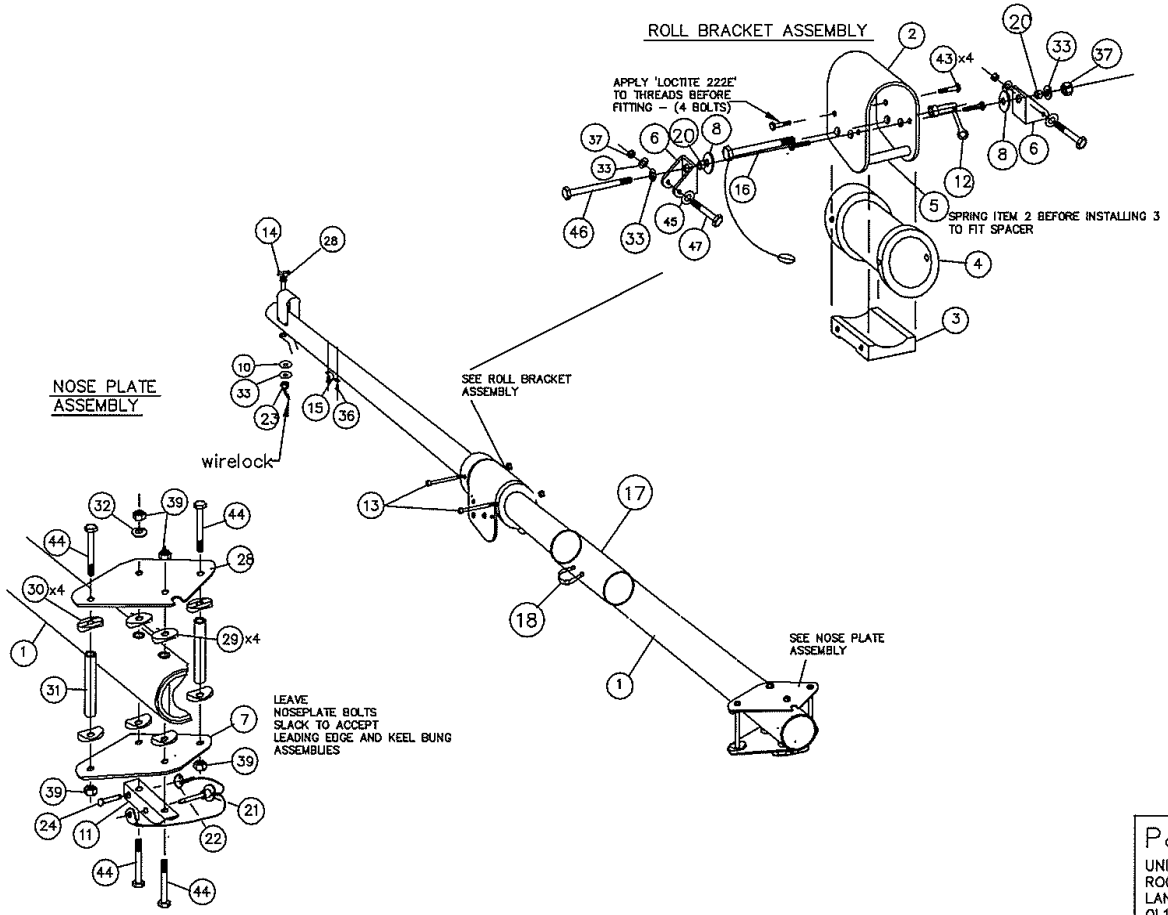

KEY CODE	DESCRIPTION	NUMBER OFF	DWG NO	PART No.
47	AN5–20A AN BOLT	2		AN5–20A
46	AN–5 CHANNEL BOLT, 4.5" LONG	1		AN5–44A
45	M8 SKIFFY WASHER	3		PMC–SB8
44	3 1/4" x 1/4" UNF HEX HT BOLT	4	AN4–32A	OR FBU4–32
43	M6 x 35mm CSK HT BOLT	4	N/A	FMS6–35
39	1/4" UNF 'P' TYPE NYLOC NUT	5	N/A	FNU4–NP
37	5/16" NYLOC NUT, THIN	3		FNU5–NT
36	3/16" STEEL MONOBOLT	2	N/A	FR6–12–002
33	5/16" WASHER – T4LP	2	N/A	FW5–T4
32	1/4" WASHER – T4LP	2	N/A	FW4–T4
31	BRASS BUSH	2	N/A	ZSP–313
30	2 1/4" x M10 ROCKING PLASTIC SADDLE	4	N/A	ZMP–142
29	2 1/4" x M8 PLASTIC SADDLE	4	N/A	PMS–M8–22
28	NOSEPLATE WITH NOTCH	1		ZPL–154
27	RESTRAINT STUD (LONG)	1		ZMS–350
26				
25	KEEL ADAPTER REAR	1	YQC–018	
24	1/4" x 13/16" SS CLEVIS PIN	1	N/A	FPCP–001
23	5/16" THICK NYLOC NUT	1		FNU5–NP
22	5/8" SAFETY RING	1	N/A	FPSR–001
21	22mm PUSH PIN (WITH LANYARD)	1	N/A	FP–001
20	BUSH	2		ZSP–312
19	6MM THIN NYLOC	2		FNM6–NT
18	TYWRAP	2		HTW–006
17	TRAVELLER	1	YQE011	YQE–011
16	HANG BOLT & LANYARD	1		ZMF–011
15	DECK EYE	1		RM–1
14	SAFETY CLIP	1		FP–003
13	SOCKET HD M6 BOLT	1		FCM6–90
12	PINCH NUT	1	SW90060	
11	NOSE CATCH CHANNEL	1	87208	ZCH–006
10	M10 SKIFFY WASHER			PMC–SB10
9	No 10 X 1/2" PAN HEAD ST SCREW	1		FMSST–004
8	PLASTIC WASHER 37 X 13 X 3MM	2		FWP–012
7	NOSE PLATE	1	87206	ZPL–003
6	CONTROL FRAME CHANNEL UPPER	2		ZCH–017B
5	SPACER	1		ZSP–091
4	ROLL BRACKET BEARING	1		ZMP–138
3	ROLL BRACKET SPACER BLOCK (TYPE 2)	1		ZMA–023
2	ROLL BRACKET	1		ZMA–041
1	KEEL TUBE COMPLETE	1		YQE–012

P&M AVIATION LTD
UNIT B, CRAWFORD ST
ROCHDALE
LANCS
OL165NU

SUB–ASSEMBLY

QUIKR KEEL ASSY

Iss.	Description of revision	Date	Approved	Drawn	Checked
B	NOTCHED NOSEPLATE	01/07/08	WGB		
A	INITIAL ISSUE	01/01/08	WGB		

Drawing No.
YQE–010

All Images Copyright P&M Aviation Ltd.

P&M AVIATION UNIT B CRAWFORD STREET ROCHDALE LANCASHIRE OL16 5NU UK
Tel: +44 (0) 1706 655134 Fax: +44 (0) 1706 631561
E Mail: flying@pmaviation.co.uk WEB : www.pmaviation.co.uk

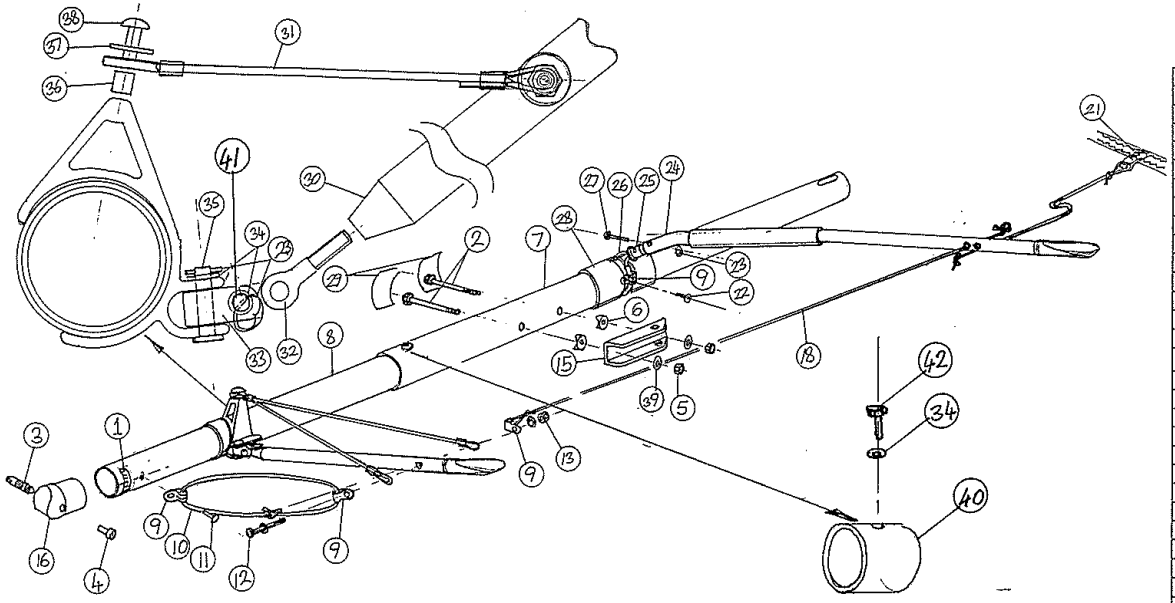

42	M6 x 16 HEX BOLT	1		FBM6-16
41	CLEVIS PIN 13 mm	1		FPCP08
40	L.E. CAPTIVE NUT ASSY.	1		ZMA183/ASH
39	T3LP WASHER	2		FW4-T4
38	M6 X 15	1		FMSB6-15
37	T4LP WASHER	1		FW4-T4
36	BUSH	2		ZSP-023
35	CLEVIS PIN 17 mm	2		FPCP009
34	T3LP WASHER	3		FW4-T3
33	UNIVERSAL JOINT BLOCK	1		UJ-001
32	EYE BOLT	1		FEM6-25
31	WASHOUT ROD CABLE	1		YQE-0293
30	OUTER WASHOUT ROD COMPLETE	1		YQE-029
29	PU TAPE PATCH 75MM SQ.	0.15M		
28	POLYTHENE FOAM PADS 75MM LONG	0.15M		
27	M6 X 32 CLEVIS PIN WITH HOLE	1		100325C
26	CABLE STROP	1		YQE-071
25	WASHOUT ROD PROTECTOR	1		ZMP-137
24	INNER WASHOUT ROD COMPLETE	1		YQE-0700L/R
23	2 TURN SPLIT RING (WITH CLEVIS PIN)	1		
22	SELF TAPPING SCREW	1		FMSST-001
21	BECKET SEWN INTO SAIL	1		
20	M5 THIN NYLOC NUT	1		FNM5-NT
19	M5 X 40 HEX HEAD BOLT	1		FBM5-40
18	3MM CORD	4M		VNR-RD3
17				
16	TURN TIP PLUG	2		ZMP-055
15	M/LIGHT LEADING EDGE CHANNEL	1		ZCH-018
14				
13	M5 T TYPE NYLOC NUT			FNM5-NT
12	M5 X 45 HEX BOLT			FBM5-45
11	RIVET	1		FR6-12-001
10	5MM SHOCK CORD FOR RETRACTION	1		VSC5-001
9	P CLIP, STAINLESS /RUBBER,	7		HCC-014
8	QUIKR L&R LEADING EDGE REAR SECTION	1		YQE-025/026
7	QUIKR L&R LEADING EDGE FRONT SECTION	1		YQE-023/024
6	2 1/4 X M8 PLASTIC SADDLE	8		PMS-M8-22
5	1/4 UNF P TYPE NYLOCK NUT	6		FNU4-NP
4	M6 X 20mm SOCKET CAP SCREW	2		FCM6-20
3	FIN LOCATION PIN	2		ZMS-333
2	1/4 UNF HEX BOLT	4		AN4-27A
1	TIP ADJUST PLACARD	2		DP-030

Iss.	Description of revision	Date	Approved	Checked	Drawn
B	CAPTIVE NUT ASSY. ADDED	15/4/09			
A	INITIAL ISSUE	1/7/08			

QUIKR LEADING EDGE ASSEMBLY

P&M AVIATION Ltd
ELM TREE PARK,
MANTON,
MARLBOROUGH,
WILTSHIRE,
SN8 1PS

Drawing No.
YQE-020

All Images Copyright P&M Aviation Ltd.

P&M AVIATION UNIT B CRAWFORD STREET ROCHDALE LANCASHIRE OL16 5NU UK
Tel: +44 (0) 1706 655134 Fax: +44 (0) 1706 631561
E Mail: flying@pmaviation.co.uk WEB : www.pmaviation.co.uk

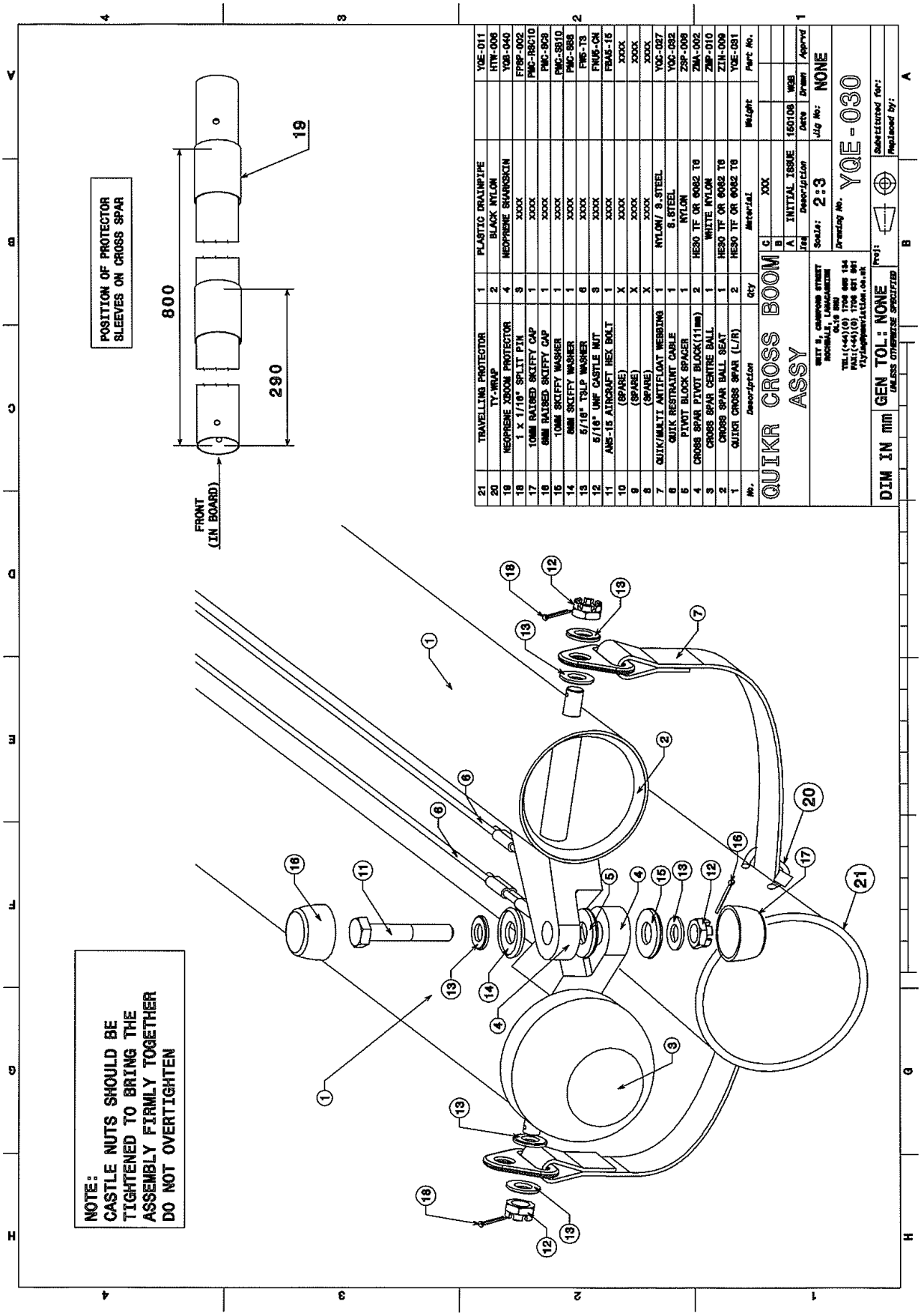

No.	Description	Qty	Material	Weight	Part No.
21	TRAVELLING PROTECTOR	1	PLASTIC DRAINPIPE		YQE-011
20	TY-WRAP	2	BLACK NYLON		HTW-006
19	NEOPRENE X800M PROTECTOR	4	NEOPRENE SHARKSKIN		YQS-040
18	1 x 1/10" SPLIT PIN	3	XXXX		FP8P-002
17	10MM RAISED SKIFFY CAP	1	XXXX		PMC-R8C10
16	8MM RAISED SKIFFY CAP	1	XXXX		PMC-8C9
15	10MM SKIFFY WASHER	1	XXXX		PMC-S8I0
14	8MM SKIFFY WASHER	1	XXXX		PMC-S8S
13	5/16" TSLP WASHER	6	XXXX		FWS-T3
12	5/16" UNF CASTLE NUT	3	XXXX		FNU5-CN
11	AN5-15 AIRCRAFT HEX BOLT	1	XXXX		FBA5-15
10	(SPARE)	X	XXXX		XXXX
9	(SPARE)	X	XXXX		XXXX
8	(SPARE)	X	XXXX		XXXX
7	QUIK/MULTI ANTIFLOAT WEBBING	1	NYLON/ S.STEEL		YQC-027
6	QUIK RESTRAINT CABLE	1	S.STEEL		YQC-032
5	PIVOT BLOCK SPACER	1	NYLON		ZSP-006
4	CROSS SPAR PIVOT BLOCK(11mm)	2	HE30 TF OR 6082 T6		ZMA-002
3	CROSS SPAR CENTRE BALL	1	WHITE NYLON		ZMP-010
2	CROSS SPAR BALL SEAT	1	HE30 TF OR 6082 T6		ZIN-009
1	QUIKR CROSS SPAR (L/R)	2	HE30 TF OR 6082 T6		YQE-031

Ref	Description	Date	Drawn	Approv
A	INITIAL ISSUE	150106	WBB	
B				
C				

P&M AVIATION UNIT B CRAWFORD STREET ROCHDALE LANCASHIRE OL16 5NU UK
Tel: +44 (0) 1706 655134 Fax: +44 (0) 1706 631561
E Mail: flying@pmaviation.co.uk WEB : www.pmaviation.co.uk

All Images Copyright P&M Aviation Ltd.

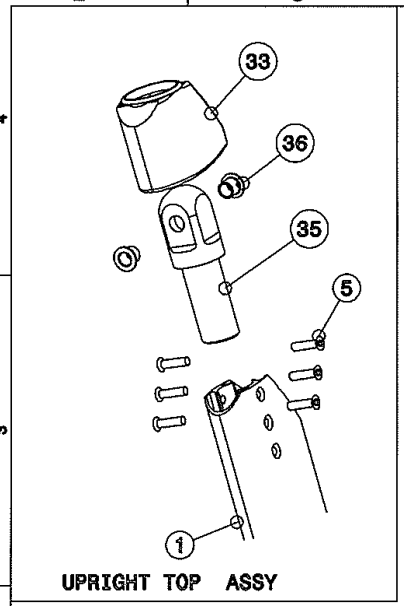

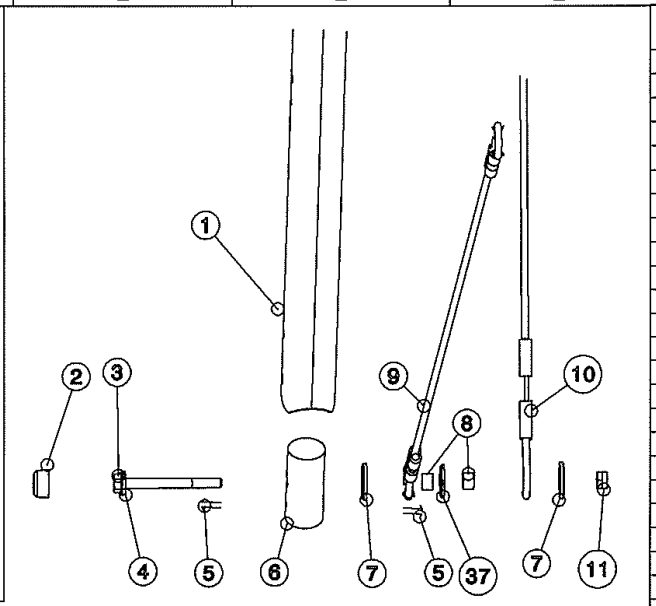

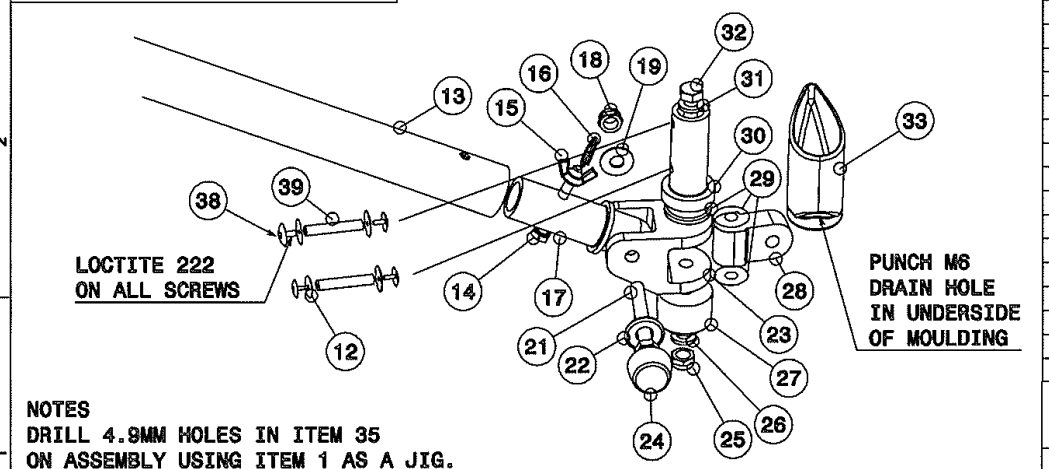

NOTES
DRILL 4.9MM HOLES IN ITEM 35
ON ASSEMBLY USING ITEM 1 AS A JIG.
KNUCKLE AXIS MUST BE
PARALLEL WITH AEROFOIL AXIS.
USE CORRECT MONOBOLT RIVETER HEAD.

No.	Description	Qty	Material	Weight	Part No.
39	BARREL PIN	4			ZM8-352
38	M6 x 12mm dome skt screw	4	STAINLESS STEEL		FM8FB5-12
37	M10 WASHER	2			FW10-B
36	GLACIER DU TOP HAT BEARING	4			BEA-688
35	C FRAME SIDE TOP KNUCKLE	2	6082-T6		ZKN-133
34	SPARE	2			
33	BOOT	4	PVC DIP MOULDING		PMM-048
32	M8.8 M6X75 SKT HEAD BOLT	2	M8.8 STEEL, ZAY PASS.		FCM8-75
31	5/16" WASHER	2	XXXX		FW5-T3
30	UPRIGHT SWIVEL	2	XXXX		YQE-043
29	8 X 30 X .25mm MYLAR WASHER	6	0.25MM MYLAR SHEET		
28	UJ STRUT	2	6082-T6		ZMA-175
27	FOOT	2	NYLON		ZMP-144
26	WASHER	2	STEEL		FW5-T3
25	M8 NYLOC NUT	2	STEEL		FNM8-NT
24	M8 RAISED SKIFFY CAP	2	NYLON		PMC-SC8
23	UJ CONTROL FRAME CORNER	2	6082-T6		ZMA-176
22	M8 SKIFFY WASHER	2	NYLON		PMC-S88
21	AN5-21A HEX BOLT	2	STEEL		FBA5-22A
20	SPARE		XXXX		XXXX
19	5/16" WASHER	2	STEEL		FW5-T3
18	5/16" UNF NYLOC NUT	2	STEEL		FNU5-NT
17	BASE TUBE KNUCKLE	2	6082-T6		ZKN-136
16	5/8" SAFETY RING	2	STAINLESS STEEL		SP8R-001
15	1/4" WINGNUT	2	STEEL		FNU4-WN
14	AN4-15 HEX BOLT	2	STEEL		FBA4-15
13	CONTROL FRAME BASE TUBE	1	1.25" + 1.125" 6082-T6		YQC-042
12	3/16" AN960-10L WASHER	8			008-025
11	1/4" UNF P TYPE NYLOC NUT	2	XXXX		FNU4-NP
10	LOWER REAR RIGGING	1	3MM CABLE		YQE-046
9	LOWER FRONT RIGGING	1	3MM CABLE		YQE-047
8	SPACER	4	STEEL		ZSP-308
7	1/4" X 3/4" WASHER	4	STEEL		FW4-12
6	AEROFOIL PLUG	2	NYLON		ZMP-135
5	3/16" X 3/8" CSK MONOBOLT	16	STEEL		FR-6-12-003
4	6MM SKIFFY WASHER	2	NYLON		PMC-SC6
3	AN4-22A HEX BOLT	2			FBA4-22A
2	6MM RAISED SKIFFY CAP	2	BLACK NYLON		PMC-RSC6
1	CONTROL FRAME UPRIGHT L/R	2	6082-T6		YQD-041

CONTROL FRAME ASSEMBLY

Iss	Description	Date	Drawn	Apprvd
C	MYLAR WASHERS	190808	WGB	
B	BARREL PINS	080508	WGB	
A	INITIAL		WGB	

UNIT B, CRAWFORD STREET
ROCHDALE, LANCASHIRE
OL16 5NU
TEL:(+44)(0) 1706 655 134
FAX:(+44)(0) 1706 631 561
flying@pmaviation.co.uk

Scale: NTS
Jig No: N/A
Drawing No. YQE-040

DIM IN mm
GEN TOL: N/A
UNLESS OTHERWISE SPECIFIED
Proj:
Substituted for:
Replaced by:

P&M AVIATION UNIT B CRAWFORD STREET ROCHDALE LANCASHIRE OL16 5NU UK
Tel: +44 (0) 1706 655134 Fax: +44 (0) 1706 631561
E Mail: flying@pmaviation.co.uk WEB : www.pmaviation.co.uk

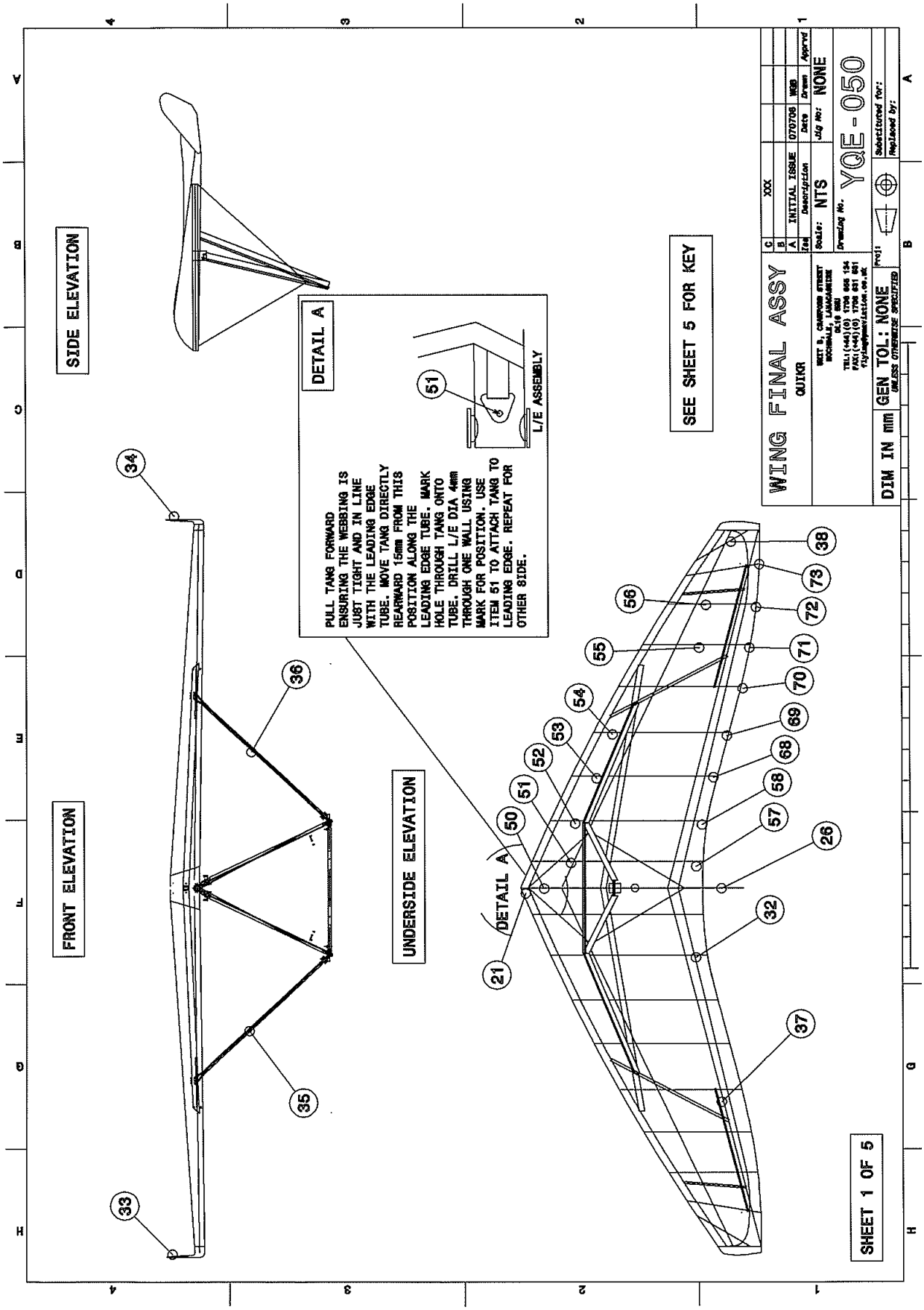

P&M AVIATION UNIT B CRAWFORD STREET ROCHDALE LANCASHIRE OL16 5NU UK
Tel: +44 (0) 1706 655134 Fax: +44 (0) 1706 631561
E Mail: flying@pmaviation.co.uk WEB : www.pmaviation.co.uk

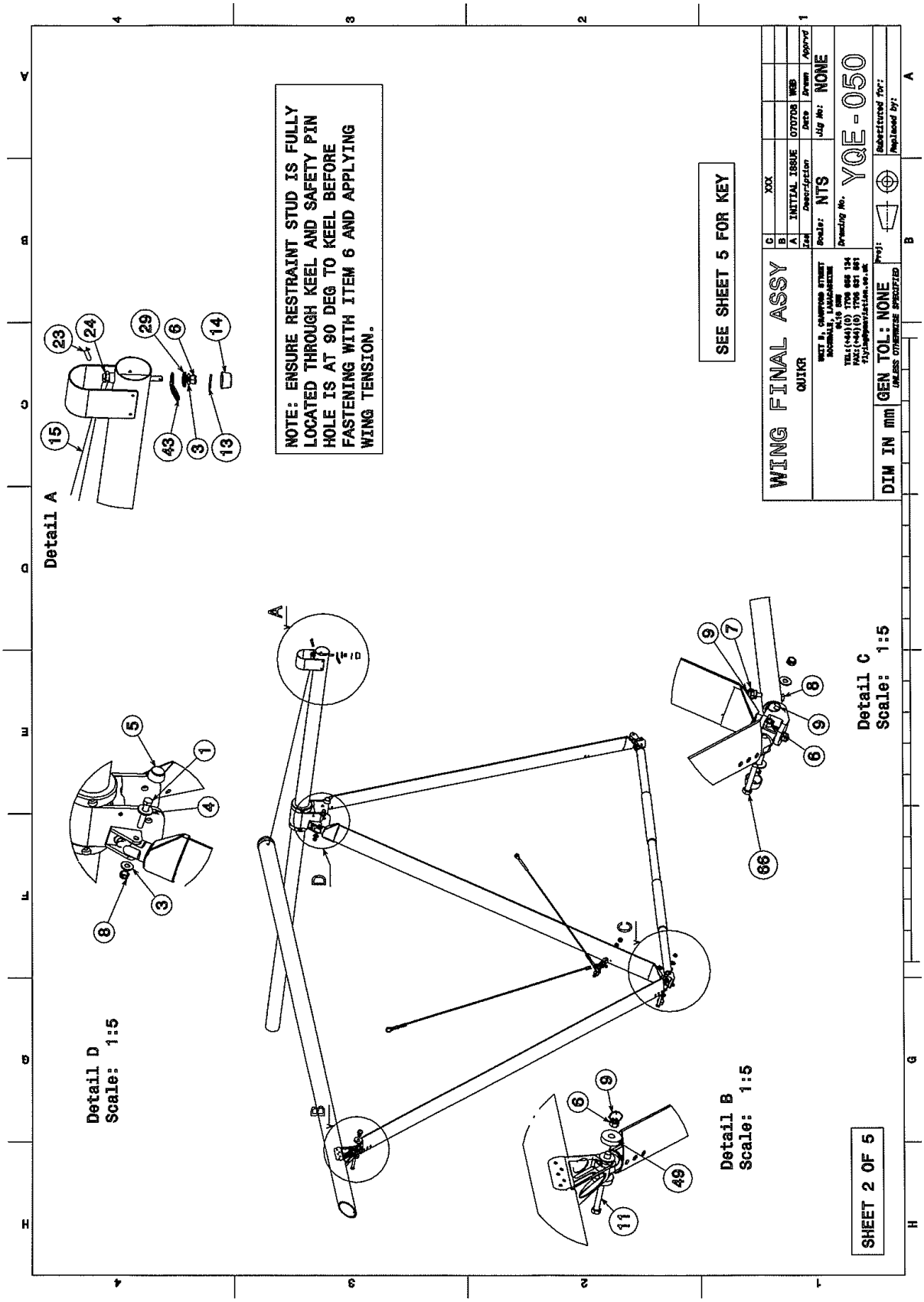

P&M AVIATION UNIT B CRAWFORD STREET ROCHDALE LANCASHIRE OL16 5NU UK
Tel: +44 (0) 1706 655134 Fax: +44 (0) 1706 631561
E Mail: flying@pmaviation.co.uk WEB : www.pmaviation.co.uk

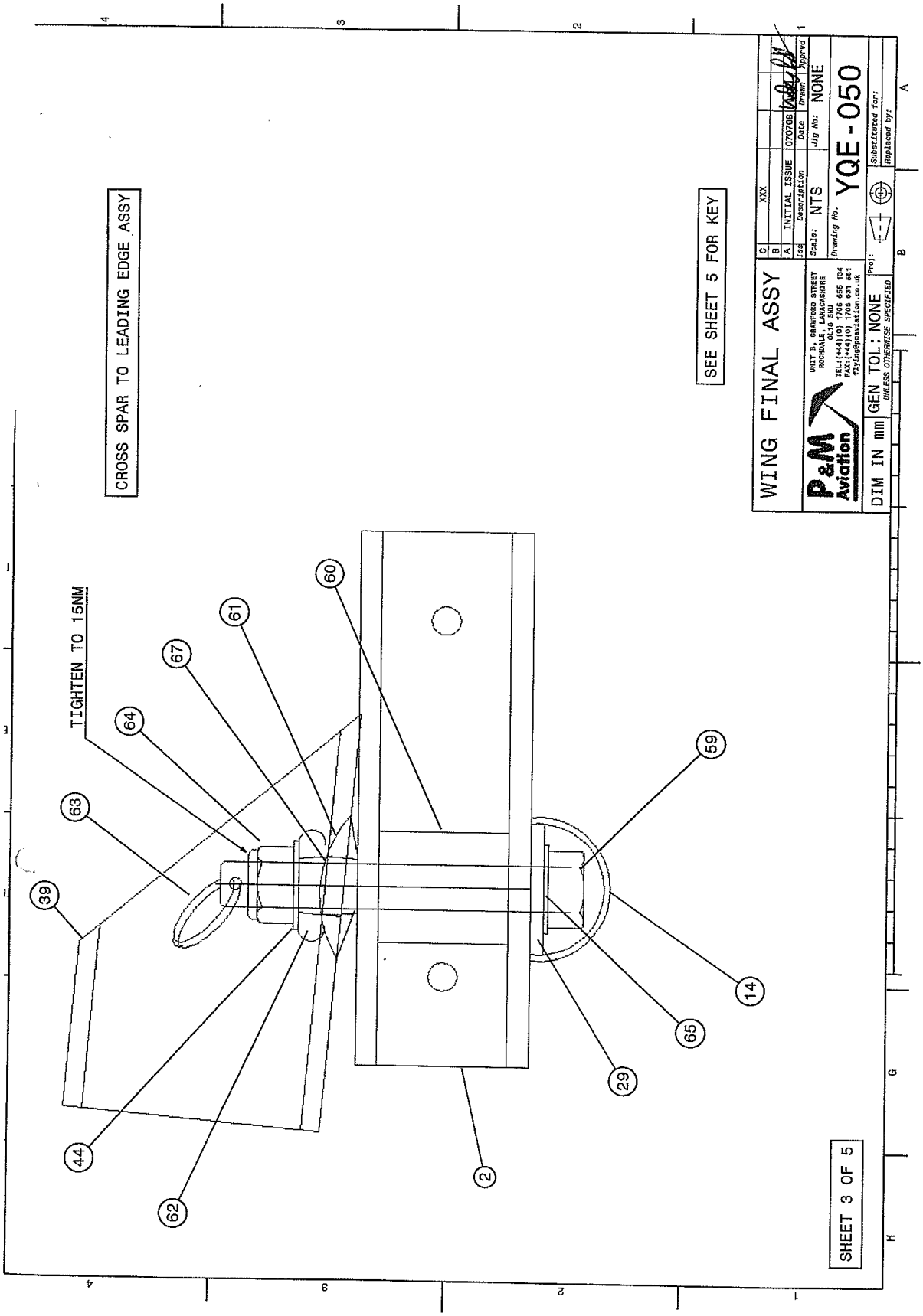

P&M AVIATION UNIT B CRAWFORD STREET ROCHDALE LANCASHIRE OL16 5NU UK
Tel: +44 (0) 1706 655134 Fax: +44 (0) 1706 631561
E Mail: flying@pmaviation.co.uk WEB : www.pmaviation.co.uk

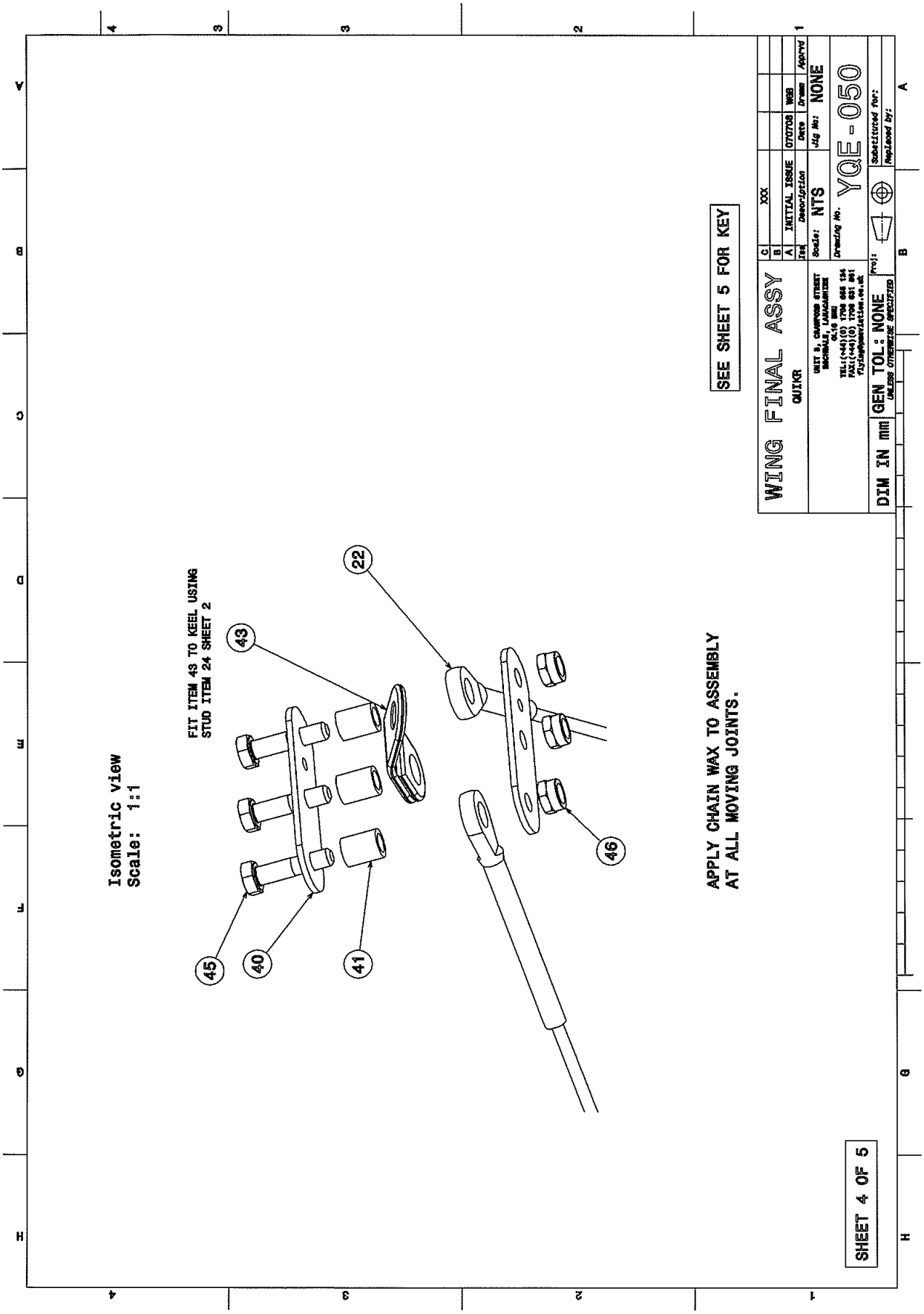

P&M AVIATION UNIT B CRAWFORD STREET ROCHDALE LANCASHIRE OL16 5NU UK
Tel: +44 (0) 1706 655134 Fax: +44 (0) 1706 631561
E Mail: flying@pmaviation.co.uk WEB : www.pmaviation.co.uk

SHEET 5 OF 5

No.	Description	Qty	Material	Weight	Part No.
73	NO. 8 UPPER RIB	2			YQE-71145 YQE-71245
72	NO. 7 UPPER RIB	2			YQE-71140 YQE-71240
71	NO.6 UPPER RIB	2	XXXX	XXXX	YQE-71135 YQE-71235
70	NO. 5 UPPER RIB	2	XXXX	XXXX	YQE-71130 YQE-71230
69	NO.4 UPPER RIB	2	XXXX	XXXX	YQE-71125 YQE-71225
68	NO. 3 UPPER RIB	2	XXXX	XXXX	YQE-71120 YQE-71220
67	L.E. JOINT BALL	2	XXXX	XXXX	ZMS-348
66	5/16" AN-5 HEX BOLT WITH HOLE	2	XXXX	XXXX	AN5-15
65	10mm MILD STEEL WASHER	4	XXXX	XXXX	FWM10-B
64	M10 NYLOCK 'T' TYPE NUT (15NM)	2	XXXX	XXXX	FNM10-NT
63	5/8" SAFETY RING	2	XXXX	XXXX	FPSR-001
62	RUBBER WASHER	2	XXXX	XXXX	XXX
61	MODIFIED PLASTIC SADDLE	2	XXXX	XXXX	ZMP-142
60	LEADING EDGE CHANEL SPACER	2	XXXX	XXXX	ZSP-060
59	MODIFIED 10X85 M8.8 BOLT	2	XXXX	XXXX	ZMS-278
58	NO. 2 UPPER RIB	2	XXXX	XXXX	YQE-71110 YQE-71210
57	NO.1 UPPER RIB	2	XXXX	XXXX	YQE-71100 YQE-71200
56	NO.6 LOWER RIB	2	XXXX	XXXX	YQE-72150 YQE-72250
55	NO.5 LOWER RIB	2	XXXX	XXXX	YQE-72140 YQE-72240
54	NO. 4 LOWER RIB	2	XXXX	XXXX	YQE-72130 YQE-72230
53	NO. 3 LOWER RIB	2	XXXX	XXXX	YQE-72120 YQE-72220
52	NO. 2 LOWER RIB	2	XXXX	XXXX	YQE-72110 YQE-72210
51	NO. 1 LOWER RIB	2	XXXX	XXXX	YQE-72100 YQE-72200
50	NOSE BATTEN	1	XXXX	XXXX	YQE-71300
49	SNUBBER WASHER	4	NYLON	XXXX	ZMP-141
48	2 TURN SAFETY RING	2	S.STEEL	XXXX	FPSR-003
47	MILD STEEL DISH WASHER	2	XXXX	XXXX	034-380
46	1/4" UNF NYLOC NUT	3	XXXX	XXXX	
45	AN4-6A BOLT	3	XXXX	XXXX	FBA4-6
44	10mm, WASHER, BIG DIA	2	STEEL		FWM10-002
43	ANGLED MODIFIED SS TANG	1	SS	XXXX	RT-2H-HD3M
42	TRAILING EDGE SHIFT CABLE	2	SS	XXXX	YQE-0511
41	BRONZE SPACER	3	STEEL	XXXX	ZSP-023
40	S STEEL TANG	2	SS	XXXX	ZPL-036
39	CROSS BOOM ASSY	1	XXXX	XXXX	YQE-030
38	NO.9 UPPER RIB	2	XXXX	XXXX	YQE-71150 YQE-71250
37	SPANWISE BATTEN	2	XXXX	XXXX	YQE-71001
36	PORT STRUT ASSY	1	XXXX	XXXX	YQE-080L
35	STARBOARD STRUT ASSY	1	XXXX	XXXX	YQE-080R
34	PORT TIP FIN ASSY	1	XXXX	XXXX	YQD-080
33	STARBOARD TIP FIN ASSY	1	XXXX	XXXX	YQD-080
32	QUIKR BATTEN PLAN ASSEMBLY	1	XXXX	XXXX	YQE-71000
31	XX	X	XXXX	XXXX	XXX
30	XX	X	XXXX	XXXX	XXX
29	SKIFFY WASHER 10mm	3	XXXX	XXXX	PMC-SB10
28	XX	X	XXXX	XXXX	XX
27	XX	X	XXXX	XXXX	XX
26	KEEL ASSY	1	XXXX	XXXX	YQE-010
25	XXX	X	XXXX	XXXX	XXX
24	KEEL RESTRAINT STUD	1	XXXX	XXXX	ZMS-350
23	SAFETY PIN	1	XXXX	XXXX	FP-003
22	LOWER REAR WIRE ASSEMBLY	2	XXXX	XXXX	YQE-046
21	LOCATION OF SERIAL NUMBER	1	XXXX	XXXX	N/A
20	XX	X	XXXX	XXXX	XXX
19	XX	X	XXXX	XXXX	XXX
18	XX	X	XXXX	XXXX	XXX
17	XX	X	XXXX	XXXX	XXX
16	XXX	X	XXXX	XXXX	XXX
15	RESTRAINT CABLE ASSEMBLY	1	XXXX	XXXX	YQC-052
14	SKIFFY CAP 10MM	3	XXXX	XXXX	PMC-RSC10
13	1/16 SPLIT PIN	1	XXXX	XXXX	FPSP-002
12	M6 NYLOCK 'T' TYPE NUT	2	XXXX	XXXX	FNM6-NT
11	5/16" AN-5 HEX BOLT WITH HOLE	2	XXXX	XXXX	AN5-22
10	1/4 M/STEEL WASHER T4LP	5	XXXX	XXXX	FMW-T4
9	SAFETY RING	6	XXXX	XXXX	FPSR-001
8	AN-4 BOLT	2	XXXX	XXXX	AN4-15
7	1/4" WINGNUT	2	XXXX	XXXX	FNU4-WN
6	5/16" CASTLE NUT	5	XXXX	XXXX	08-220
5	SKIFFY CAP 8mm	2	XXXX	XXXX	PMC-SC8
4	SKIFFY WASHER 8mm	2	XXXX	XXXX	PMC-SB8
3	5/16 TBL3 WASHER	2	XXXX	XXXX	FW5-T3
2	LEADING EDGE ASSY	2	XXXX	XXXX	YQE-020
1	AN5-20A HEX BOLT	2	XXXX	XXXX	AN5-20A

WING FINAL ASSY

QUIKR

Iss	Description	Date	Drawn	Apprvd
C	XXX			
B				
A	INITIAL ISSUE	070708	WGB	

UNIT B, CRAWFORD STREET
ROCHDALE, LANACASHIRE
OL16 5NU
TEL:(+44)(0) 1706 655 134
FAX:(+44)(0) 1706 631 561
flying@pmaviation.co.uk

Scale: NTS

Jig No: NONE

Drawing No. YQE-050

DIM IN mm

GEN TOL: NONE
UNLESS OTHERWISE SPECIFIED

Proj:

Substituted for:

Replaced by:

All Images Copyright P&M Aviation Ltd.

P&M AVIATION UNIT B CRAWFORD STREET ROCHDALE LANCASHIRE OL16 5NU UK
Tel: +44 (0) 1706 655134 Fax: +44 (0) 1706 631561
E Mail: flying@pmaviation.co.uk WEB : www.pmaviation.co.uk

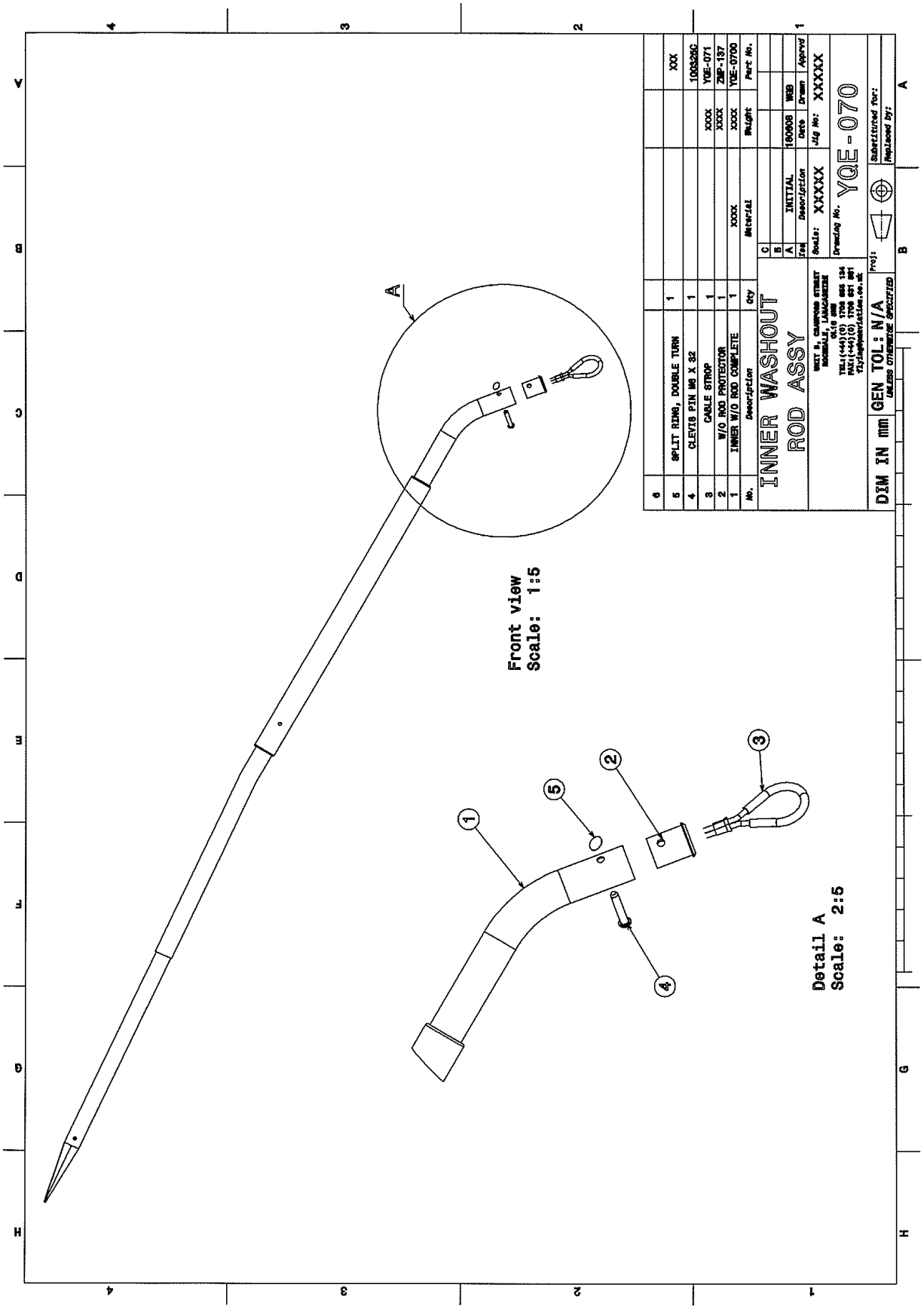

P&M AVIATION UNIT B CRAWFORD STREET ROCHDALE LANCASHIRE OL16 5NU UK
Tel: +44 (0) 1706 655134 Fax: +44 (0) 1706 631561
E Mail: flying@pmaviation.co.uk WEB : www.pmaviation.co.uk

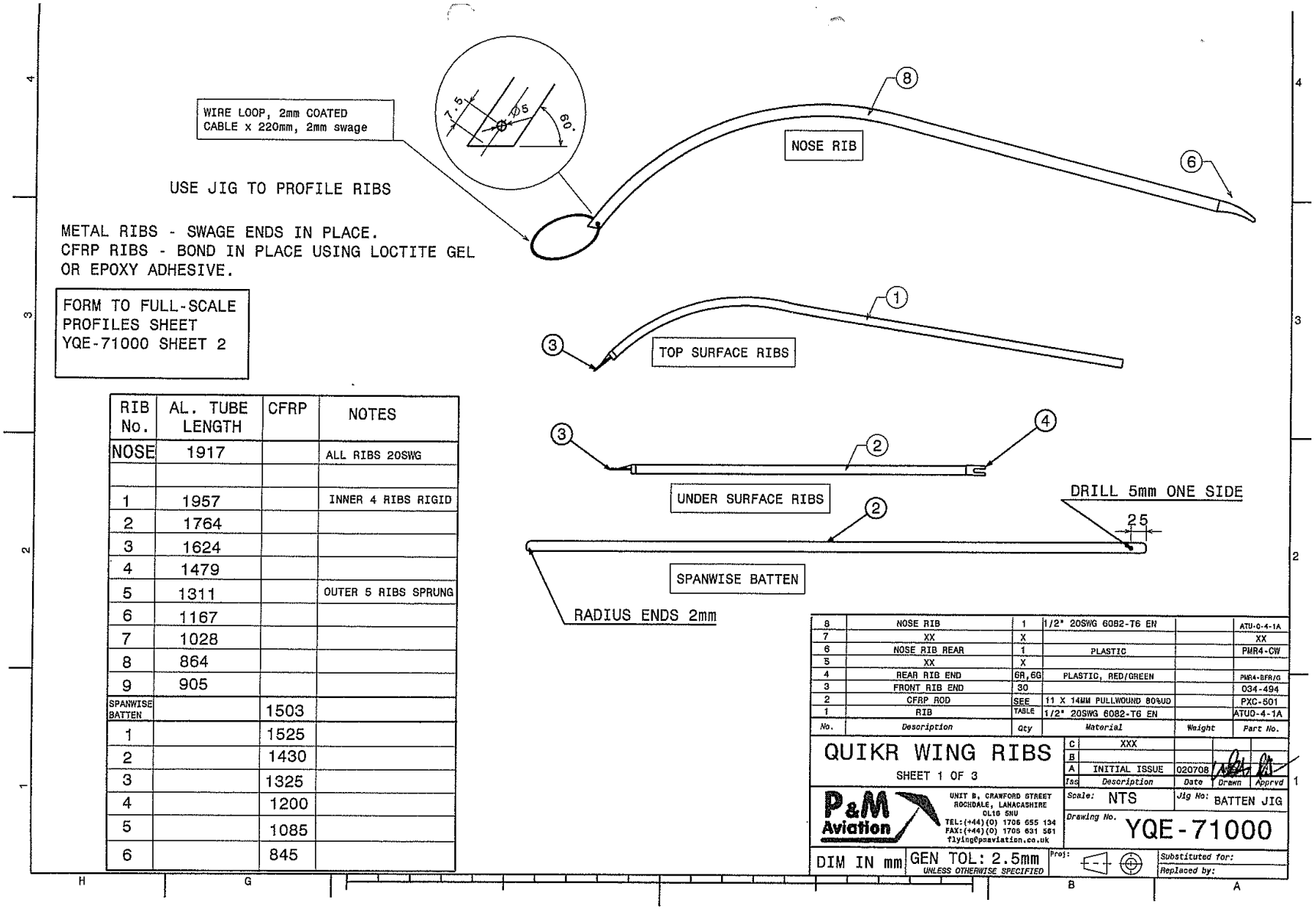

RIB No.	AL. TUBE LENGTH	CFRP	NOTES
NOSE	1917		ALL RIBS 20SWG
1	1957		INNER 4 RIBS RIGID
2	1764		
3	1624		
4	1479		
5	1311		OUTER 5 RIBS SPRUNG
6	1167		
7	1028		
8	864		
9	905		
SPANWISE BATTEN		1503	
1		1525	
2		1430	
3		1325	
4		1200	
5		1085	
6		845	

All Images Copyright P&M Aviation Ltd.

P&M AVIATION UNIT B CRAWFORD STREET ROCHDALE LANCASHIRE OL16 5NU UK
Tel: +44 (0) 1706 655134 Fax: +44 (0) 1706 631561
E Mail: flying@pmaviation.co.uk WEB : www.pmaviation.co.uk

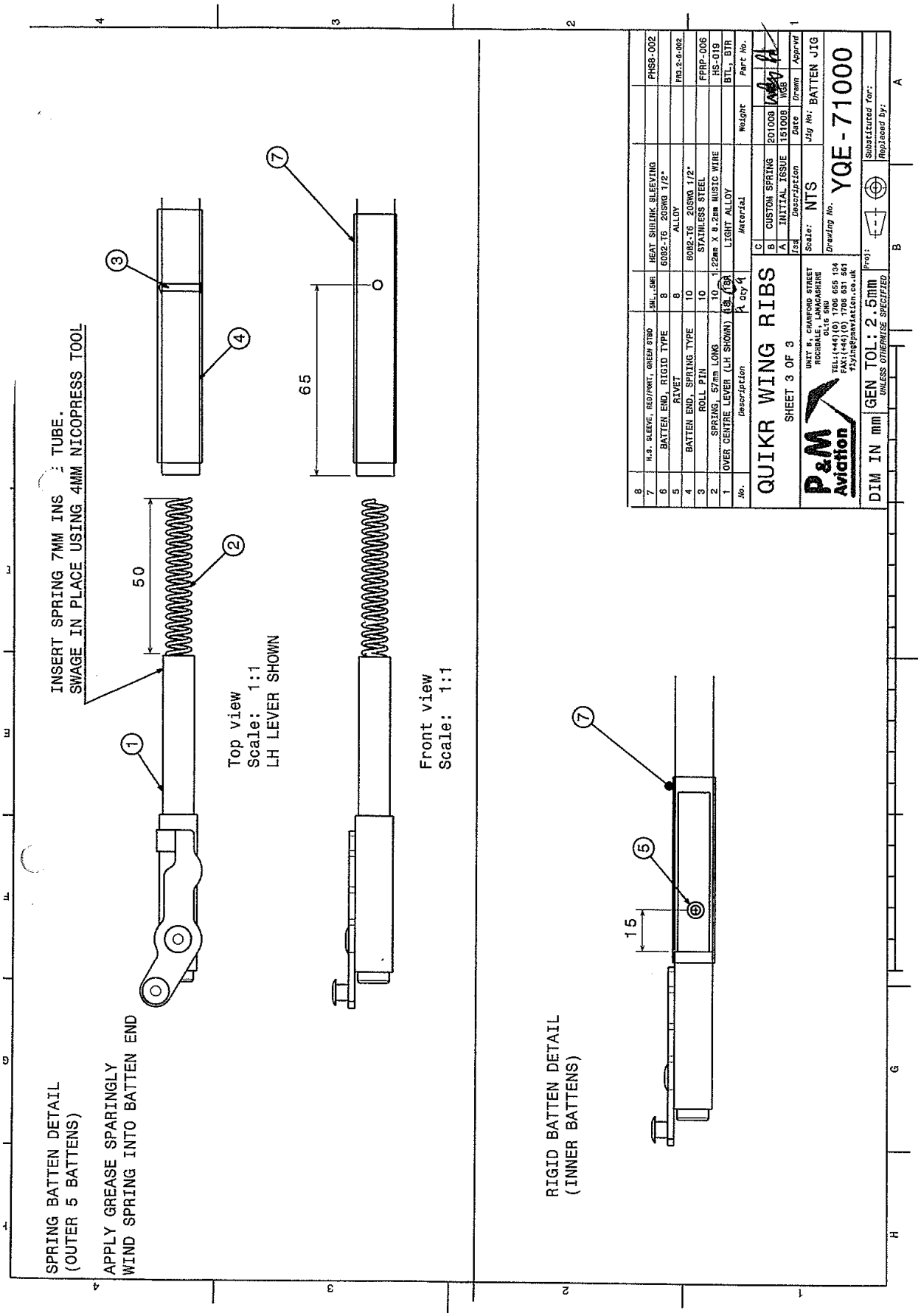

P&M AVIATION UNIT B CRAWFORD STREET ROCHDALE LANCASHIRE OL16 5NU UK
Tel: +44 (0) 1706 655134 Fax: +44 (0) 1706 631561
E Mail: flying@pmaviation.co.uk WEB : www.pmaviation.co.uk

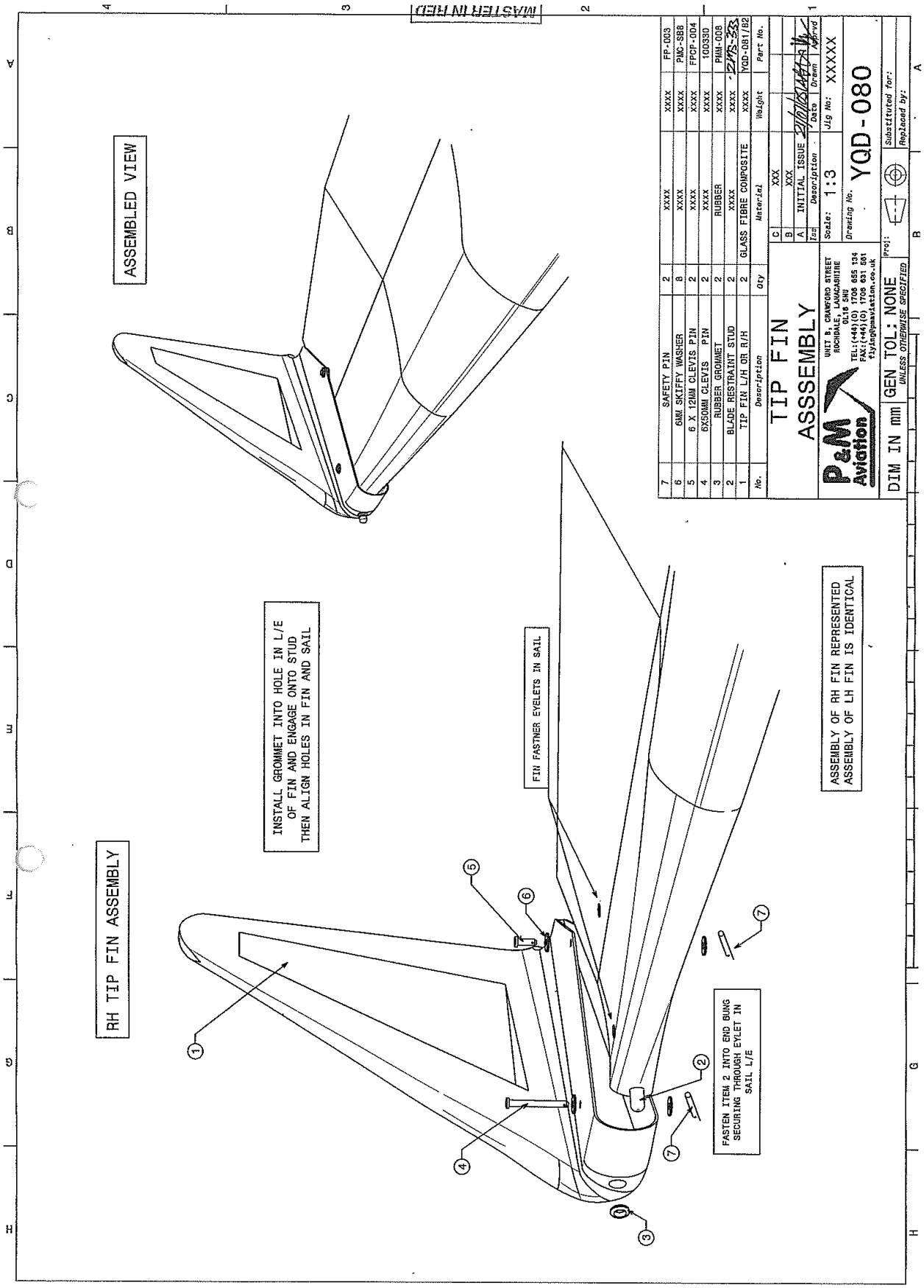

P&M AVIATION UNIT B CRAWFORD STREET ROCHDALE LANCASHIRE OL16 5NU UK
Tel: +44 (0) 1706 655134 Fax: +44 (0) 1706 631561
E Mail: flying@pmaviation.co.uk WEB : www.pmaviation.co.uk

All Images Copyright P&M Aviation Ltd.

P&M AVIATION UNIT B CRAWFORD STREET ROCHDALE LANCASHIRE OL16 5NU UK
Tel: +44 (0) 1706 655134 Fax: +44 (0) 1706 631561
E Mail: flying@pmaviation.co.uk WEB : www.pmaviation.co.uk

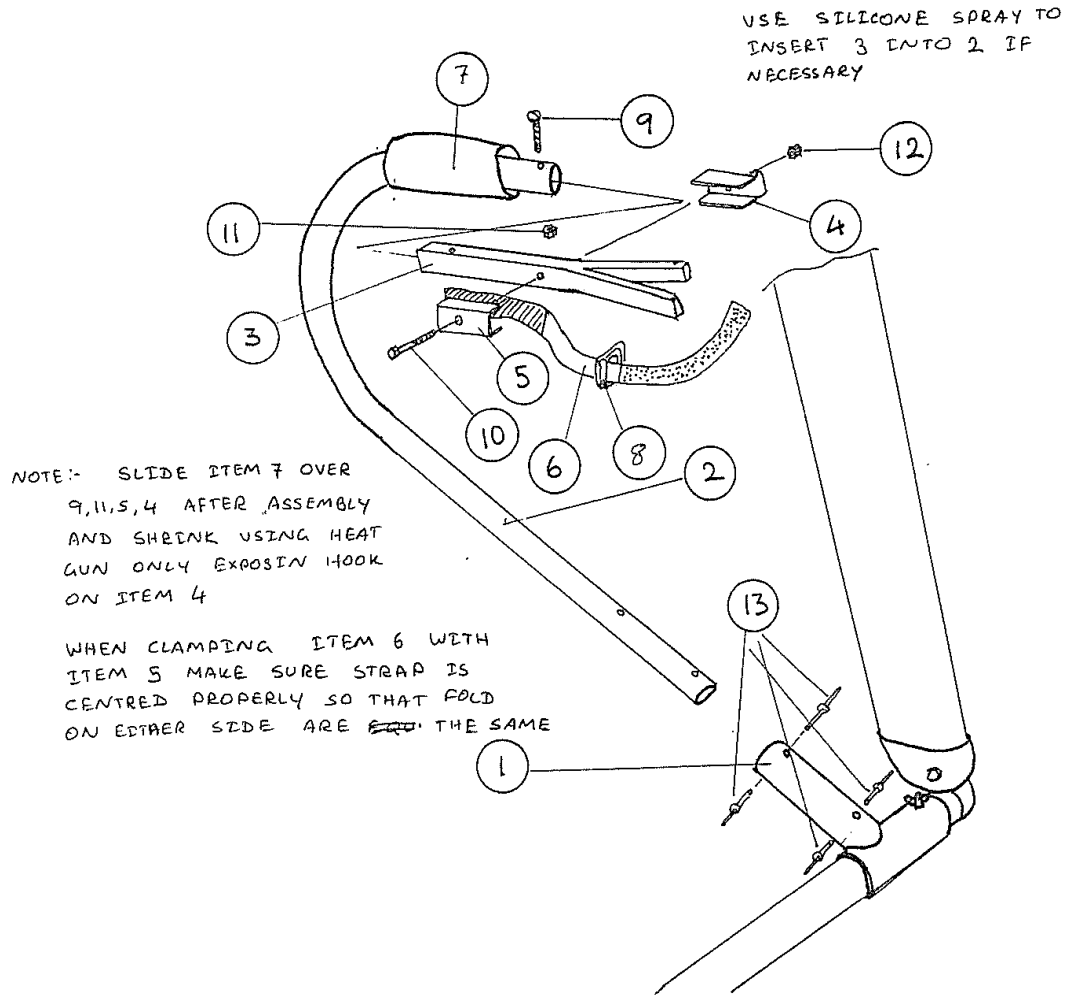

13	3/16 MONOBOLTS	8	FR6-12-002
12	M6 NYLOCK 'T' TYPE	2	FNM6-NT
11	M4 NYLOCK 'T' TYPE	2	FNM4-NT
10	M6x30 HEX HT BOLT	2	FBM6-30
9	M4x30 PAN HEAD SCREW	2	FSM4-30
8	STEEL BUCKLE	2	XSB-010
7	YELLOW HEAT SHRINK SLEAVE	150mm	PMS8-003
6	QUIK TRAINING BAR STRAP	2	YQC-069
5	TRAINING BAR HOOK WASHER	2	ZMS-318
4	TRAINING BAR WASHER	2	ZMS-319
3	TRAINING BAR UPPER MOUNT	2	ZMP-129
2	QUIK TRAINING BAR HANDLE	2	YQC-067
1	QUIK TRAINING BAR 'T' PIECE	2	YQC-068

SOLAR WINGS AVIATION Ltd
ELM TREE PARK,
MANTON,
MARLBOROUGH,
WILTSHIRE,
SN81PS

	Date	Name
Drawn	101202	TGS
Approved	10/12/02	
Checked	30/11/04	

SUB-ASSEMBLY

QUIK INSTRUCTOR BAR ASSEMBLY

Iss.	Description of revision	Date	Approved
A	INITIAL ISSUE	101002	

Drawing No. YQC-0401