P&M Aviation Ltd
Unit B
Crawford Street
Rochdale
Lancashire OL16 5NU
Great Britain
Tel: +44 (0) 1706 655134
Fax: +44 (0) 1706 631561
flying@pmaviation.co.uk

Quik & Quik GT450 Trike
Illustrated Parts Catalogue

	Contents	Page No
YQC-000	Pegasus Quik	2
YQD-000	Quik GT450	3
SW-89250	Front Undercarriage	4
SW-90250	Main Subframe/Rear UC	6
SW-90252	Rear Steering Bar	9
SW-90253	Seat	10
SW-90257	Throttle and Choke	12
SW-90260	Seat Belt	14
SW-90561	Electrical/Instrument	15
YQC-080	Basetube	17
YQC-090	Pylon	18
YQC-091	Caliper & Tube Assy.	19
YQC-093	Trim System Assembly	20
YQC-097	Trim Motor	23
YQC-100	Master Cyl Assy.	24
YQC-101	Airfoil Strut Assembly	25
YQC-130	Brake System	26
YQC-140	912 Fuel System	27
YQC-145	65L Tank Assembly	28
YQC-160	Powerplant Sub Assembly (Rotax Exhaust)	29
YQC-180	Quik Propeller Fitting	37
YQC-200	Fairings	38
YQD-160	Powerplant Assy. (CKT Twin Exhaust)	41
EXH-039	Twin Exhaust Assy.	48
YQD-200	Fairings	49
YQD-201	Instrument Panel Assy	52
YQD-220	Engine Cover Assy.	53

This manual should be used in conjunction with the Operators Manual. Some parts that are listed are not user serviceable. The following drawings are provided as a convenience to aid identification of parts for the ordering of spare parts from the factory. When ordering parts be sure to include the exact aircraft type and model, including engine number and aircraft registration/serial number, together with a description of the part and part number where applicable.

All drawings are copyright of P&M Aviation Ltd.

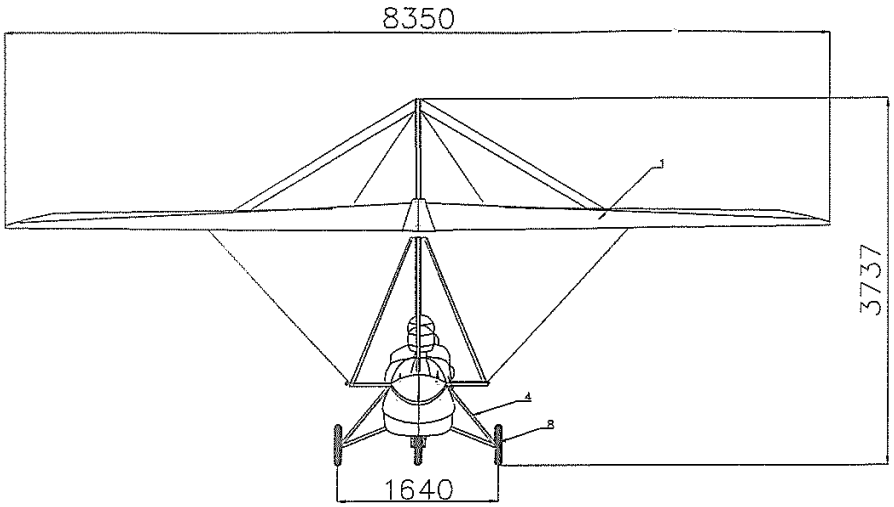

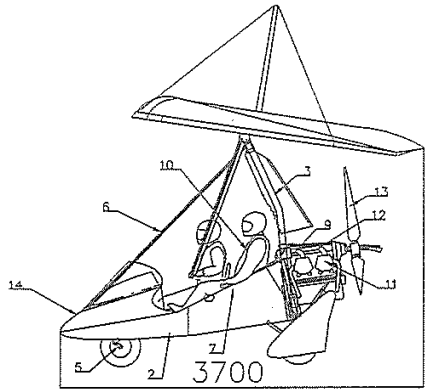

Drawing No YQC-000

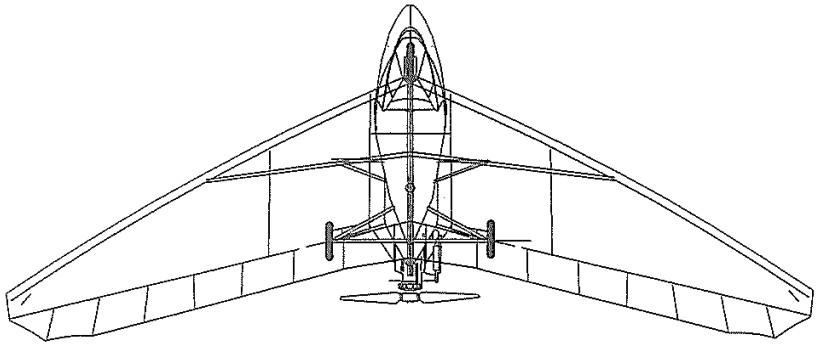

key	Description	Drawing No
1	QUIK WING	YQC-001
2	BASETUBE SUB ASSY	YQC-080
3	PYLON ASSY	YQC-090
4	MAIN SUBFRAME AND REAR U/C ASSY	SW-90250
5	FRONT U/C ASSY	SW-89250
6	FRONT STRUT ASSY	YQC-110
7	SEAT ASSY	SW-90253
8	BRAKE ASSY	YQC-130
9	FUEL SYSTEM ASSY	YQC-140
10	SEAT BELT ASSY	SW-90260
11	POWER PLANT ASSY	YQC-160
12	THROTTLE AND CHOKE ASSY	SW-90257
13	PROPELLER FITTING	YQC-180
14	FAIRINGS AND FRONT STRUT LOWER ASSY	YQC-200
15	PLACARDS	SW90314
16	LYNX COMMS FIT	LYNX-DWG-QTM
17	REAR STEERING BAR ASSY	SW-90252

PEGASUS QUIK

ROTAX 912S FOUR CYLINDER ENGINE

Iss.	Description of revision	Date	Approved
2	KEY ADDED	21/6/06	
1	INITIAL	21/8/02	

PEGASUS AVIATION LTD
Elm Tree Park, Manton
Marlborough
Wiltshire SN8 1PS
Tel: 0672 86578

	Date	Name
Drawn	21/8/02	W.BROOKS
Approved		
Checked		

Scale NTS | Jig No.

Drawing No. YQC-000

DIMS IN MM | GEN TOL+-20mm UNLESS OTHERWISE SPECIFIED | Substituted for | Replaced by

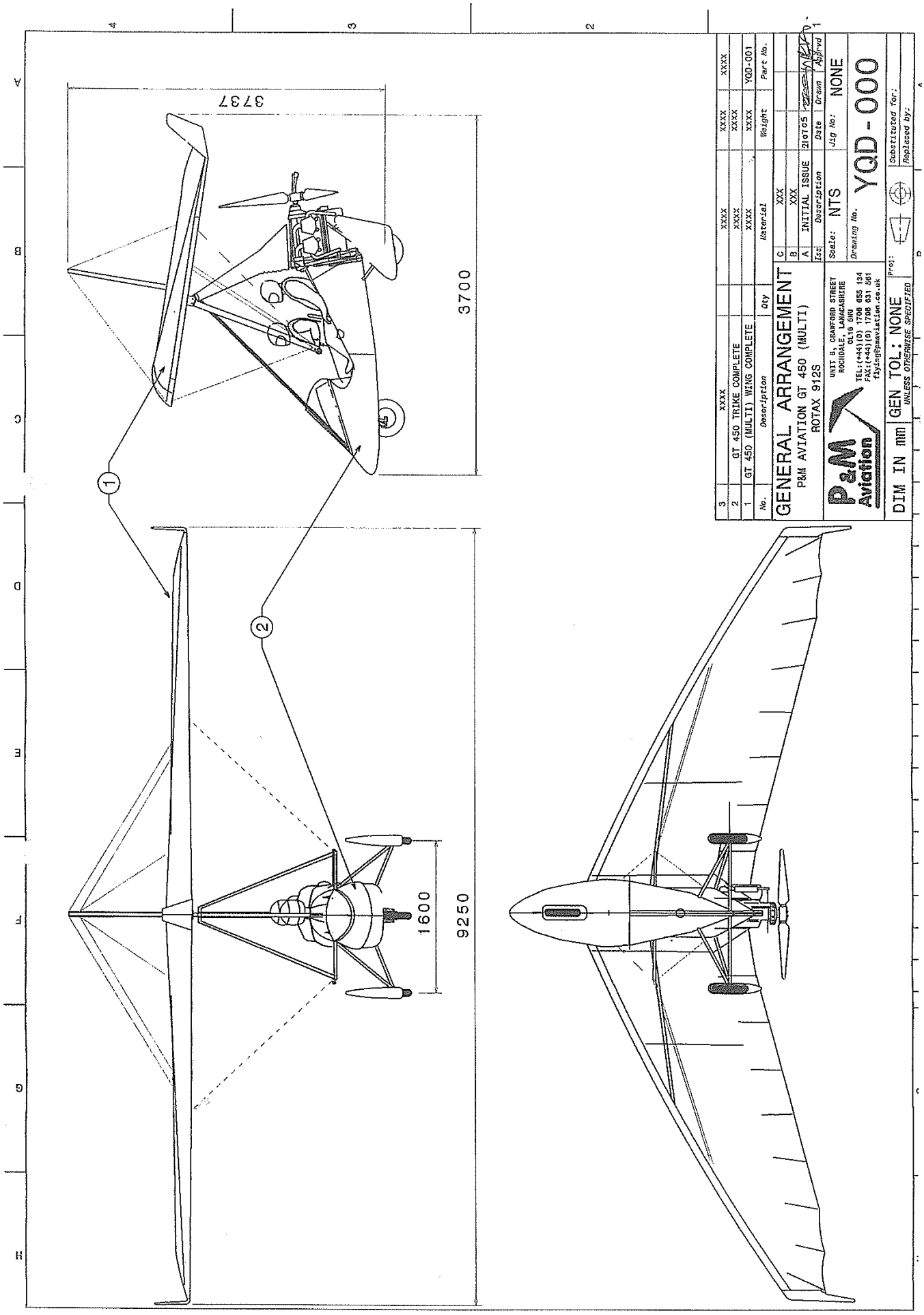
3737
3700
1600
9250
GENERAL ARRANGEMENT
P&M AVIATION GT 450 (MULTI)
ROTAX 912S
GT 450 TRIKE COMPLETE
GT 450 (MULTI) WING COMPLETE
P&M Aviation
UNIT B, CRANFORD STREET
ROCHDALE, LANCASHIRE
OL16 5NU
TEL:(+44)(0) 1706 655 134
FAX:(+44)(0) 1706 631 561
flying@pmaviation.co.uk
Drawing No. YQD-000
Scale: NTS
Jig No: NONE
DIM IN mm
GEN TOL: NONE
UNLESS OTHERWISE SPECIFIED

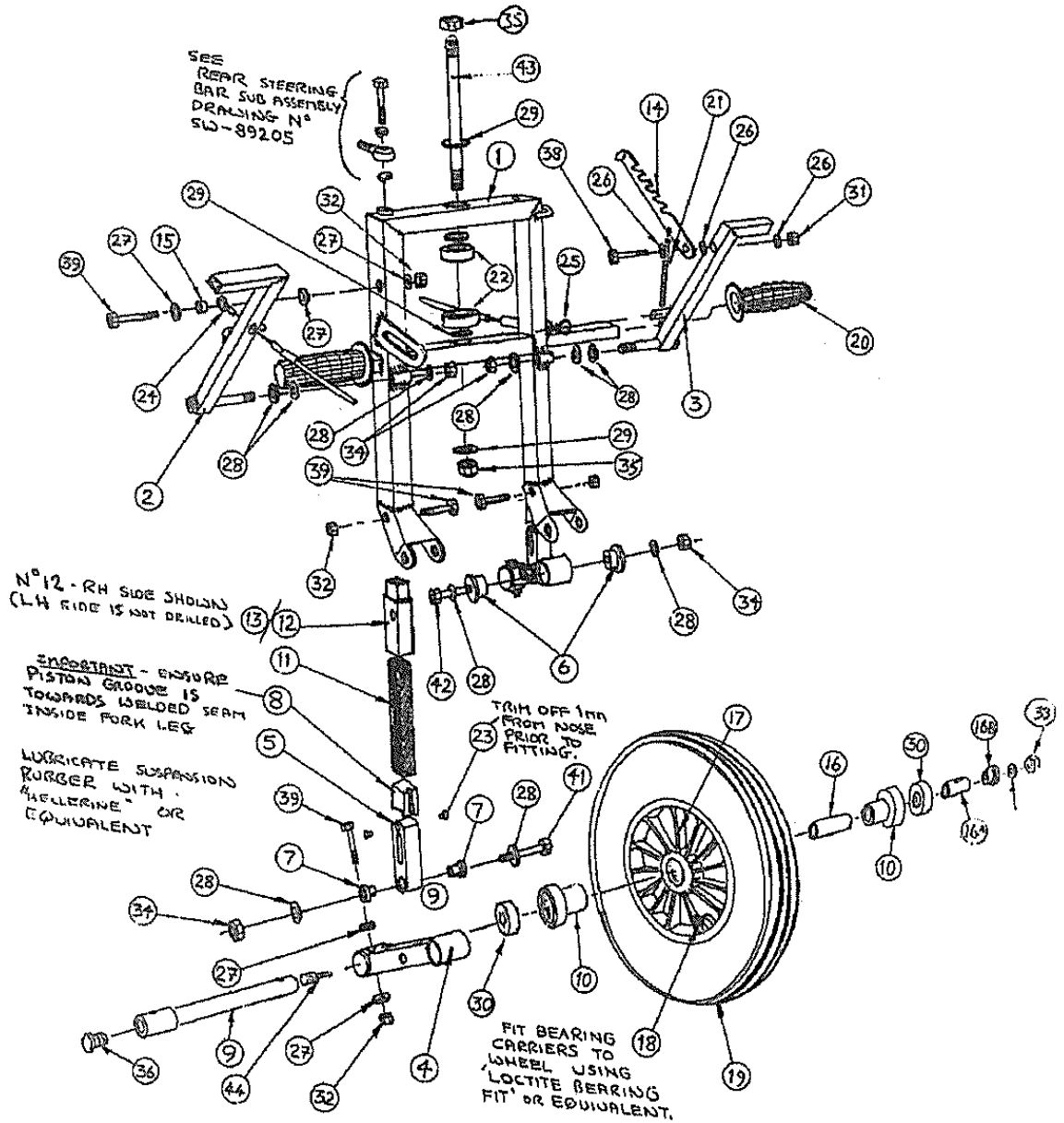

No	DESCRIPTION	Qty	DWG NO SW-	PART/FAST CODE
44	FRONT AXLE EYEBOLT	1		ZHS-070
43	M10 x 180mm HT HEX BOLT	1	N/A	ZHF-055
42	M8 x 55mm HT HEX BOLT	2	N/A	FBHS-55
41	TRAILING LINK/PUSH ROD BOLT	2	89348	ZHF-006
40	SPARE			
39	M8 x 40mm HT HEX BOLT	6	N/A	FBHS-40
38	M8 x 30mm HT HEX BOLT (OPTIONAL)	1	N/A	FBHS-30
37	SPARE			
36	3/4" BLACK END PLUG OR5520	1	N/A	PEP8-001
35	10mm 'T' TYPE NYLOC NUT	2	N/A	FBN10-NT
34	8mm 'T' TYPE NYLOC NUT	6	N/A	FBN8-NT
33	8mm 'P' TYPE NYLOC NUT	1	N/A	FBN8-NP
32	8mm 'T' TYPE NYLOC NUT	6	N/A	FBN8-NT
31	8mm 'T' TYPE NYLOC NUT (OPTIONAL)	1	N/A	FBN8-NT
30	6400-2RS BEARING	2	N/A	BEA-6P-8
29	10mm WASHER - FORM B	4	N/A	FBW10-B
28	8mm WASHER - FORM B (NB:QTY 12 OPTIONAL)	16	N/A	FBW8-B
27	1/4" WASHER - TRP	7	N/A	FBW-T3
26	6mm WASHER - FORM B (OPTIONAL)	3	N/A	FBW6-B
25	BRAKE CABLE	SEE	89281	
24	THROTTLE CABLE	SEE	89283	
23	PUSH CLIP (084 6709)	4	N/A	FWPC-001
22	6300-2RS BEARING	SEE	89247	
21	RETURN SPRING (OPTIONAL)	1	N/A	HS-004
20	FOOTREST REST RUBBER	2	N/A	PMM-007
19	TYRE 350 x 8 - 4 PLY	1	N/A	WTV-003
18	INNER TUBE 350 x 8 (S/VALVE)	1	N/A	WTU-003
17	HUFA WHEEL (PPG 400 35 BORE WHEEL)	1	N/A	WH-006
16B	BEARING ADJUSTMENT CAP	1	90184	ZMA-053
16A	BEARING ADJUSTMENT TUBE	1	90185	ZMA-053
16	BEARING SPACER	1	90182	ZMA-051
15	THROTTLE CABLE BUSH	1	89300	ZSP-031
14	PARKING BRAKE LEVER (OPTIONAL)	1	89299	ZMS-119
13	FRONT SUSPENSION PACKER (LEFT HAND)	1	89296	ZMP-026
12	FRONT SUSPENSION PACKER (RIGHT HAND)	1	89302	ZMP-027
11	FRONT SUSPENSION RUBBER	2	89297	ZMP-027
10	BEARING CARRIER	2	90109	ZMA-049
9	FRONT WHEEL AXLE	1	90183	ZMS-101
8	PISTON	2	89294	ZMP-033
7	PUSHROD BEARING	4	89292	ZMP-034
6	TRAILING LINK BEARING	4	89291	ZMP-030
5	PUSHROD	2	89237	ZMA-024
4	TRAILING LINK	2	89238	TOU-19530
3	BRAKE PEDAL (OPTIONAL)	1	89233	TOU-19592
2	THROTTLE PEDAL	1	89232	TOU-19590
1	FRONT FORKS	1	89235	TOU-19810

PEGASUS AVIATION
ELM TREE PARK
MANTON
MARLBOROUGH

	Date	Name
Drawn	291195	S.TUDDENHAM
Approved	13-1-98	
Checked	13.1.98	L. Beale

Iss.	Description of revision	Date	Approved
F	NSO PG 320	19/12/97	L. Beale

SUB-ASSEMBLY

FRONT UNDERCARRIAGE

Drawing No.
SW-89250

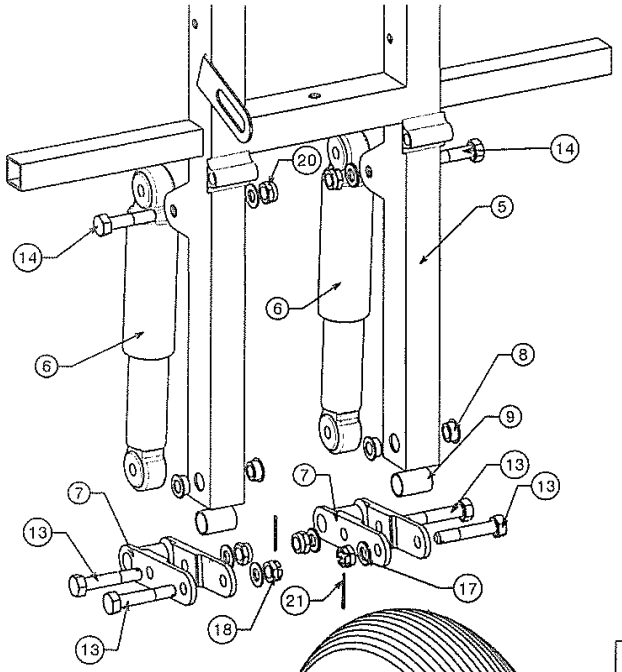

MAKE SURE BOTH STRUTS (ITEM 3) ARE SET TO IDENTICAL LENGTHS BEFORE ASSEMBLY (APROX 200mm)

DO NOT OVER TIGHTEN ITEM 18

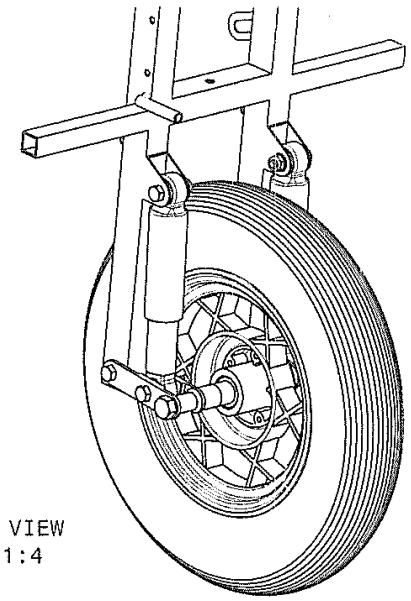

ASSEMBLED VIEW
Scale: 1:4

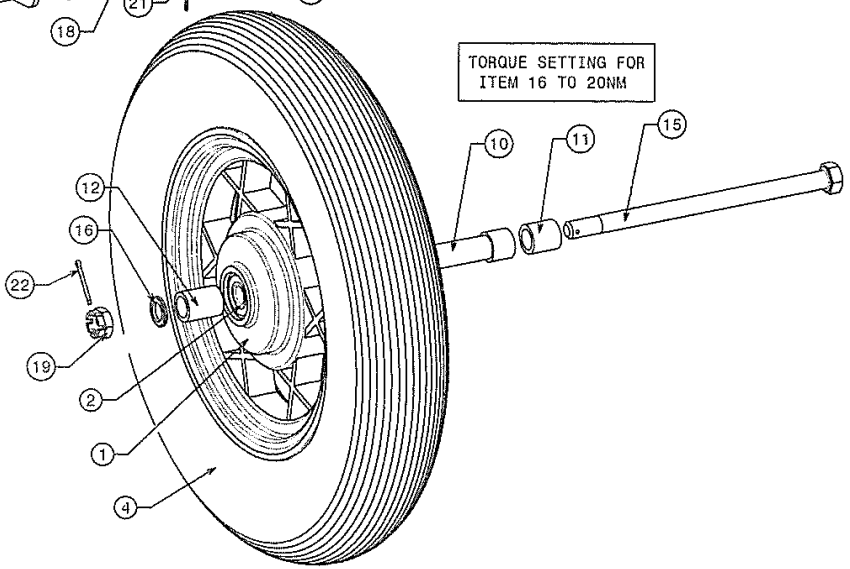

SHEET 2 OF 2

No.	Description	Qty	Material	Weight	Part No.
22	PLATED 1 1/2" COTTER PIN	1	xxx	xxx	013-016
21	1/2" COTTER PIN	2	xxx	xxx	013-017
20	5/16" NYLOCK THIN TYPE	4	xxx	xxx	008-135
19	M12 CASTLE NUT	1	xxx	xxx	032-229
18	5/16" CASTLE NUT AN310-5	2	xxx	xxx	008-220
17	5/16" WASHER AN-960-416	4	xxx	xxx	008-040
16	12MM MS WASHER FORM C	1	xxx	xxx	FWM12-C
15	M12 X 200 HEX HT BOLT	1	xxx	xxx	032-236
14	5/16" AN5-13A BOLT	2	xxx	xxx	004-416
13	5/16" AN5-16 BOLT	4	xxx	xxx	004-516
12	WHEEL SPACER (STBD)	1	xxx	xxx	ZSP-302
11	WHEEL SPACER (PORT)	1	xxx	xxx	ZSP-301
10	AXLE CENTRE SPACER	1	xxx	xxx	032-227
9	SPACER TUBE (FRONT FORKS)	2	xxx	xxx	ZSP-303
8	OILITE BUSHES	4	xxx	xxx	032-185
7	TRAILING LINKS (STRUT TYPE)	2	xxx	xxx	ZMS-324
6	SPRING STRUT SHOCK ABSORBER	2	xxxx	xxxx	032-158
5	FRONT FORKS (STRUT TYPE)	1	xxxx	xxxx	ZMS-325
4	H/D 4 PLY 3.5 x 8 TYRE	1	xxxx	xxxx	026-100
3	16" INNER TUBE CRANKED VALVE	1	xxxx	xxxx	026-091
2	SEALED WHEEL BEARING	2	xxxx	xxxx	026-240
1	GREMECA ALUM WHEEL CENTRE	1	xxxx	xxxx	026-220

FRONT UNDERCARRIAGE

ALLUMINIUM WHEEL AND STRUT TYPE

Iss	Description	Date	Approved
C	XXX	XXXXXX	
B	XXX	XXXXXX	
A	INITIAL ISSUE	071204	

PEGASUS
ELM TREE PARK MANTON
MARLBOROUGH
WILTSHIRE SN8 1PS
TEL:01672 861350 TEL:01672861328

	Date	Name
Drawn	041104	TGG
Approved	041104	
Checked	07/12/04	

Scale: 1:3 Jig No: XXXXX
Drawing No. SW-89250

DIM IN mm GEN TOL: NONE UNLESS OTHERWISE SPECIFIED

Proj: Substituted for: Replaced by:

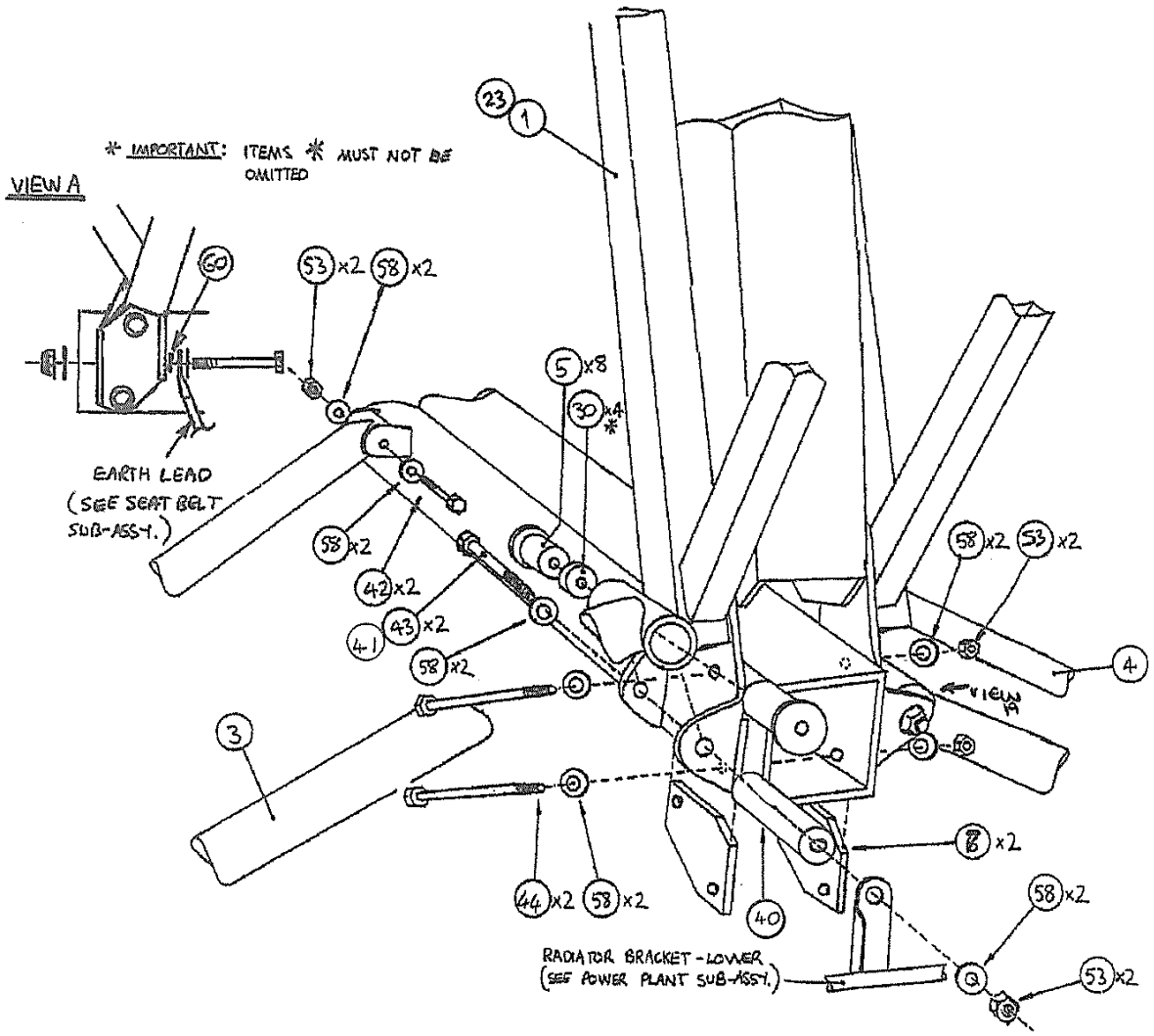

KEY CODE	DESCRIPTION	NUMBER OFF	DWG NO SW-	PART/FAST' CODE
49	M6 x 10mm SOCKET CAP SCREW	4	N/A	FCM6-10
48	M6 x55mm HEX HT BOLT	2	N/A	FBM6-55
47	SPARE	2	N/A	FBM10-50
46	SPARE			
45	10NF x 3/8" BUT'N C/HD (PVC PATCH)			
44	M8 x 90mm HEX HT BOLT	2	N/A	FBM8-90
43	M8 x 65mm HEX HT BOLT	2	N/A	FBM8-65
42	M8 x 60mm HEX HT BOLT	2	N/A	FBM8-60
41	M8 X 160mm HEX HT BOLT (MOD 167 ONLY)	2	N/A	FBM8-160
40	90mm SPACER (MOD 164 ONLY)	2	N/A	ZSP-312
39	350-8 TYRE 4 PLY	2	N/A	WTY-003
38	INNER TUBE 350-8 BMV	2	N/A	WTU-002
37	PM 1625 DX BEARING	2	N/A	BEA-DX2
36	BEARING 6203-2RS-C99	2	N/A	BEA-BB-7
35	BALL BEARING	2	N/A	BEA-BB-5
34	ROD END BEARING	4	N/A	BEA-RE-2
33	SPARE			
32	SPARE			
31	TIE MOUNTS	3	N/A	HTM-001
* 30	5mm SPACER (05-10-22-05)	4	N/A	FWP-003
29	6.5 ID x 22.25 OD NYLON WASHER	1	N/A	FWP-001
28	PLASTIC PULLEY (HA1886)	1	N/A	RP16
27	BONDED FEET-M6 AUM 191/7 (WHITE SPOT)	2	N/A	EVI-003
26	SPARE			
25	M6 PLAIN NUT	2	N/A	FNM6-G8
24	M6-SPRING WASHER	2	N/A	FWM6-SW
23	MAIN SUBFRAME (912 & HKS OPTION)	1	90489	ZMS-253
22	SIDE STRUT CONNECTING BOLT	2	90249	ZMS-182
21	BRAKE BACKPLATE (MODIFIED)	2	90213	WW-008
20	MODIFIED WHEEL	2	90211	WW-007
19	CLAMPING CAP	2	90226	ZMA-062
18	AXLE SPACER	2	90225	ZMA-061
17	STUB AXLE	2	90224	ZMS-173
16	ROD END SPACER	4	90228	ZMA-063
15	GUIDE BEARING	2	90279	ZMP-064
14	REAR SUSPENSION STOP	2	90247	ZMP-068
13	REAR SUSPENSION RUBBER	2	90244	ZMP-066
12	SPRING CUP LOWER	2	90185	ZMA-057
11	SPRING CUP UPPER	2	90187	ZMA-059
10	SIDE STRUT LWR CONNECTOR	2	90186	ZMA-058
9	SIDE STRUT	2	90251	TOB-14230
8	SUSPENSION GUIDE TUBE	2	90188	ZMS-166
7	PACKER	2	90230	ZMP-061
6	PULLEY GUARD - LOWER (TWO STROKE OPTION)	1	90292	ZMS-178
5	TRAILING LINK BEARING	8	89291	ZMP-030
4	RIGHT WISHBONE	1	90208	ZMS-171
3	LEFT WISHBONE	1	90207	ZMS-170
2	PYLON GUIDE STRIP	2	90329	ZMP-074
1	MAIN SUB FRAME (TWO STROKE OPTION)	1	90190	ZMS-167

P&M AVIATION LTD
UNIT B
CRAWFORD STREET
ROCHDALE OL16 5NU
TEL: 01706 655134

	Date	Name
Drawn	110693	T.CLARKE
Approved	081293	WB
Checked	091293	

SHEET 1 of **3** – REAR VIEW

SUB-ASSEMBLY	MAIN SUBFRAME/REAR U/CARRIAGE

Iss.	Description of revision	Date	Approved
1	MOD 167 ADDED	260607	

Drawing No. SW-90250

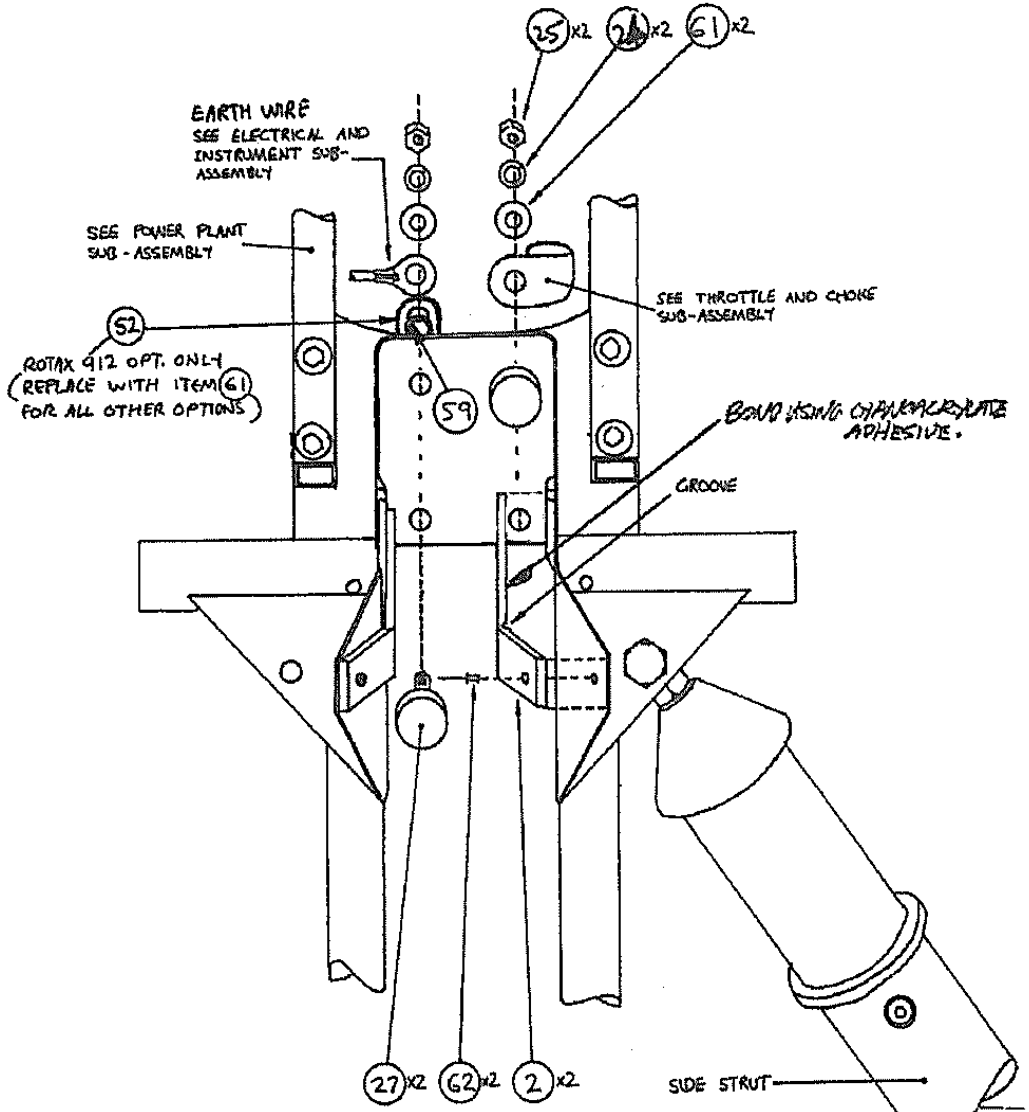

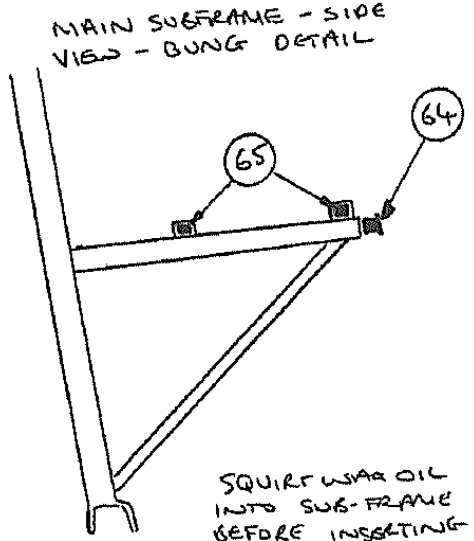

ITEM CODE	DESCRIPTION	NUMBER OFF	DWG NO SW-	PART/FAST CODE
65	SPARE			
65	20 x 20mm END BUNG	4	N/A	POP-005
64	25 x 20mm END BUNG	2	N/A	POP-004
63	'P' CLIP	3	N/A	HCC-003
62	3/16" DIA x 3/8" MONEL POP RIVET	8	N/A	FRB-12-001
61	1/4 T.3 L.P WASHER M/STEEL	4	N/A	FBM-T3
60	M8 SPRING WASHER	1	N/A	FNM8-SW
59	M6 SPRING WASHER (OPTIONAL)	1	N/A	FNM6-SW
58	8mm M/STEEL WASHER (10 OPTIONAL)	13	N/A	FNM8-B
57	10mm M/STEEL WASHER	12	N/A	FNM10-B
56	12mm M/STL WASHER FORM C	2	N/A	FNM12-C
55	8mm 'T' TYPE NYLOC NUT	4	N/A	FNM8-NT
54	12mm 'T' TYPE NYLOC NUT	4	N/A	FNM12-NT
53	8mm 'T' TYPE NYLOC NUT (10 OPTIONAL)	7	N/A	FNM8-NT
52	4 HOLE TANG (912 OPT. ONLY)	1	N/A	RT-4H
51	10mm M/STEEL FULL NUT	4	N/A	FNM10-08
50	10mm 'T' TYPE NYLOC NUT	4	N/A	FNM10-NT

SHEET 2 of **3** – MAIN SUBFRAME
(FRONT VIEW)

Iss.	Description of revision	Date	Approved
H	REJECT NO'S	21/1/00	K. Poole

SOLAR WINGS AVIATION Ltd
Elm Tree Park
Manton Marlborough
Wiltshire SN8 1PS, UK
TEL: 0672 861578

	Date	Name
Drawn	110693	T.CLARKE
Approved	8/12/93	
Checked	10/12/93	

SUB-ASSEMBLY | MAIN SUBFRAME/REAR U/CARRIAGE

Drawing No. SW-90250

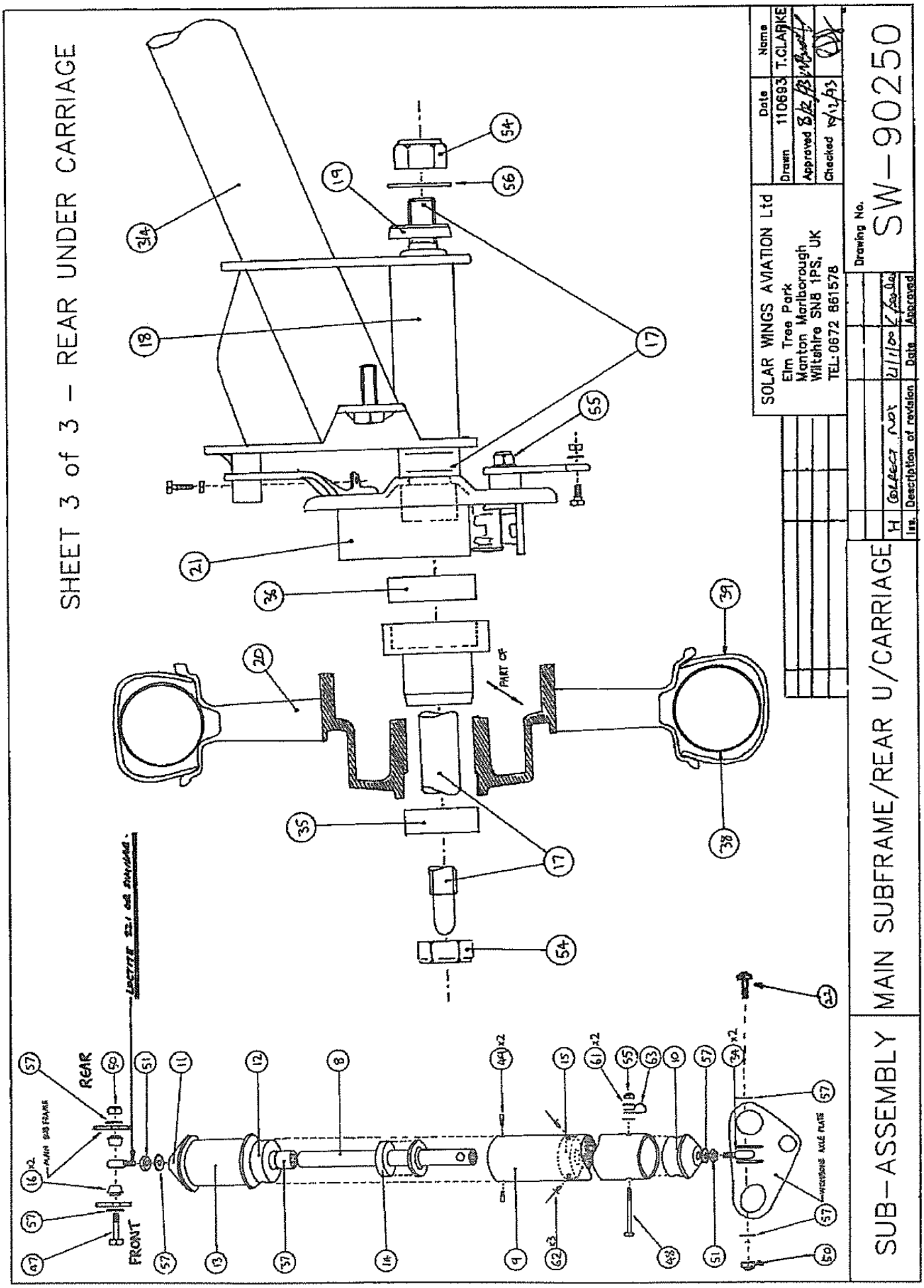
SHEET 3 of 3 – REAR UNDER CARRIAGE
SOLAR WINGS AVIATION Ltd
Elm Tree Park
Manton Marlborough
Wiltshire SN8 1PS, UK
TEL: 0672 861578
Drawn 110693 T.CLARKE
Approved
Checked
Drawing No.
SW–90250
SUB–ASSEMBLY MAIN SUBFRAME/REAR U/CARRIAGE
REAR
FRONT
PART OF

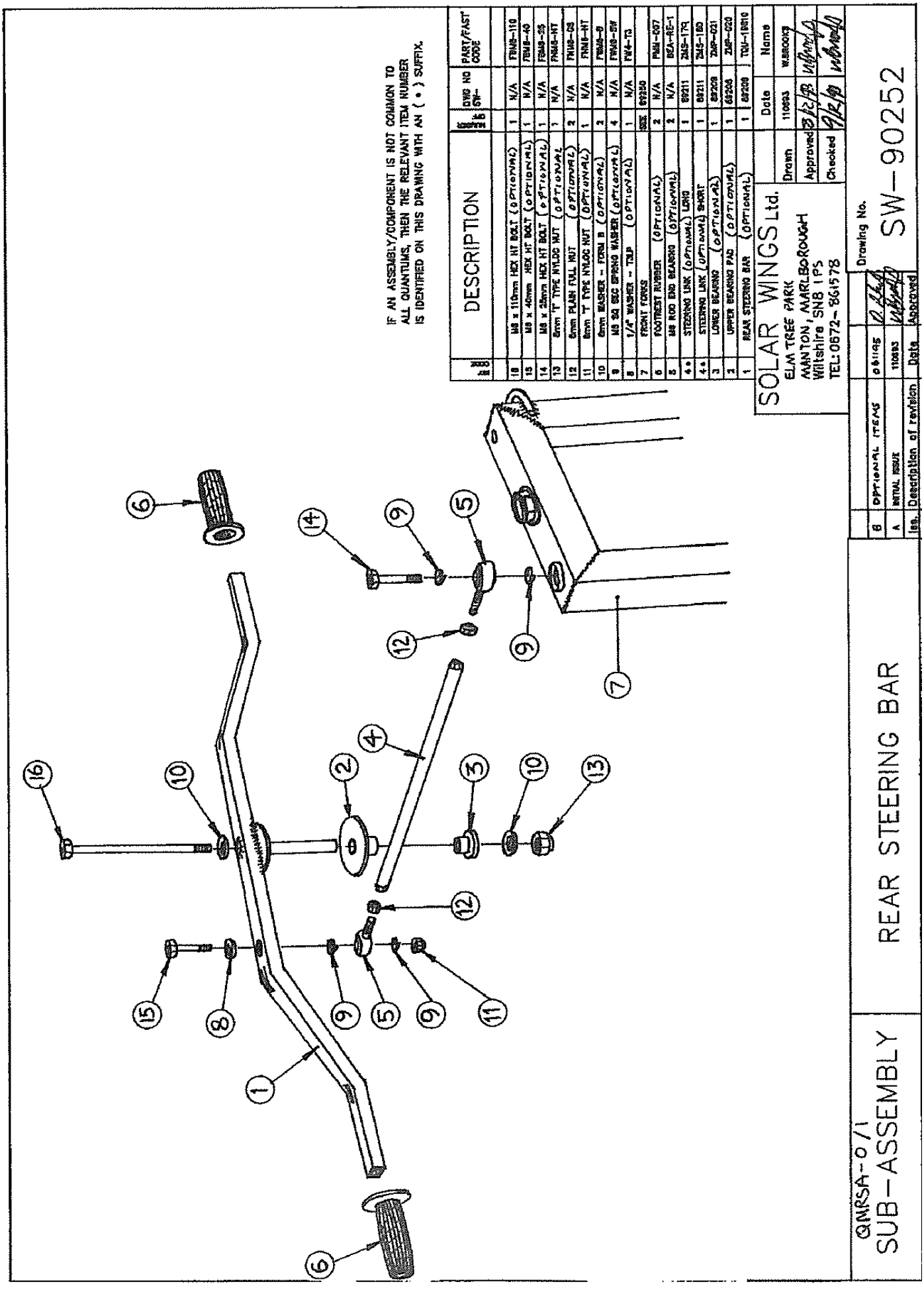
IF AN ASSEMBLY/COMPONENT IS NOT COMMON TO ALL QUANTUMS, THEN THE RELEVANT ITEM NUMBER IS IDENTIFIED ON THIS DRAWING WITH AN (•) SUFFIX.
DESCRIPTION
PART/FAST CODE
SOLAR WINGS Ltd.
ELM TREE PARK
MANTON, MARLBOROUGH
Wiltshire SN8 1PS
TEL: 0672-861578
Drawing No.
SW-90252
REAR STEERING BAR
SUB-ASSEMBLY
QNRSA-0/1

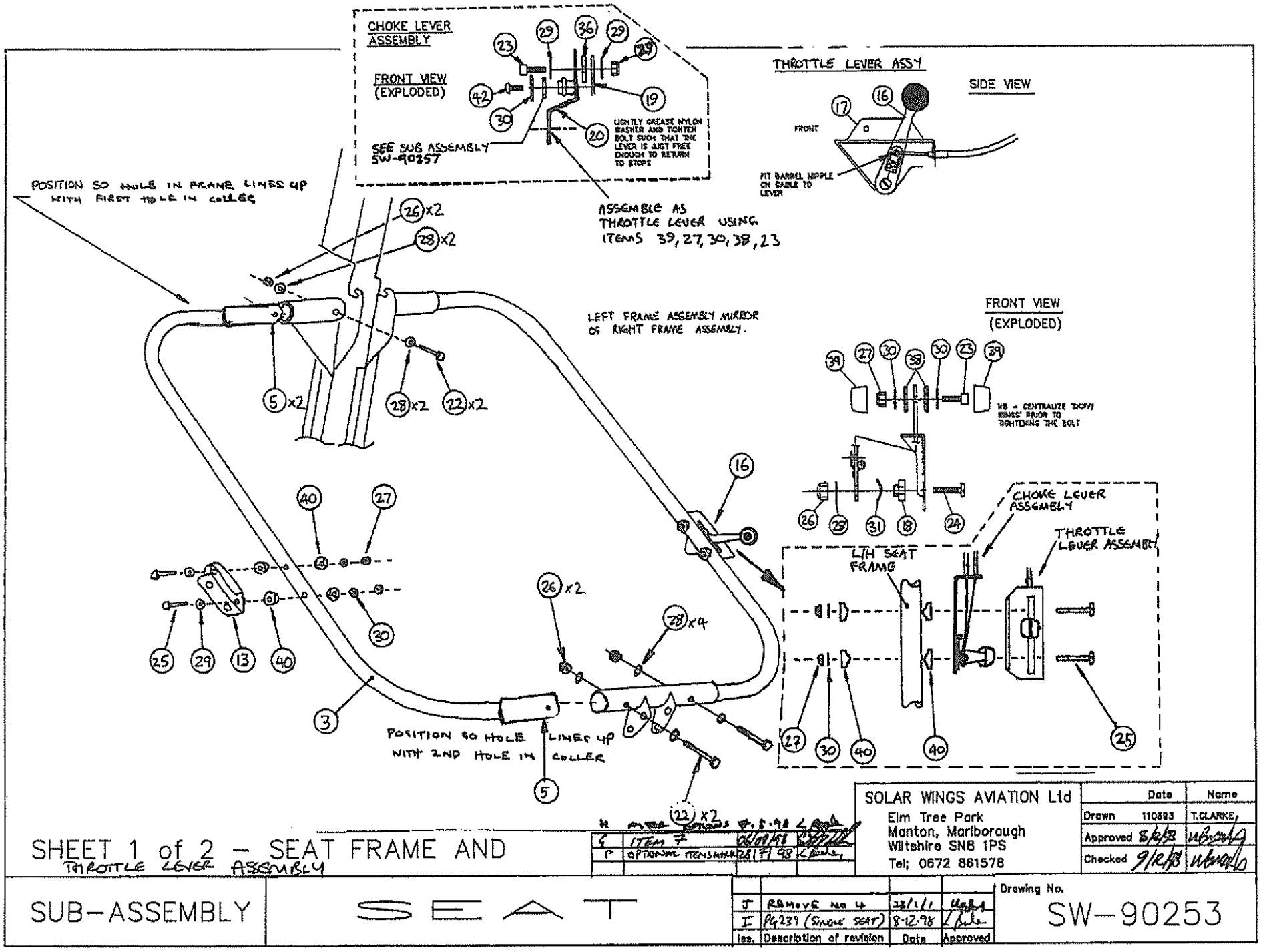

SHEET 1 of 2 – SEAT FRAME AND THROTTLE LEVER ASSEMBLY

G	ITEM 7	26/08/98	
F	OPTIONAL ITEMS ADDED	28/7/98	

SOLAR WINGS AVIATION Ltd
Elm Tree Park
Manton, Marlborough
Wiltshire SN8 1PS
Tel; 0672 861578

	Date	Name
Drawn	110893	T.CLARKE,
Approved	8/8/93	
Checked	9/8/93	

SUB-ASSEMBLY | SEAT

Iss.	Description of revision	Date	Approved
J	REMOVE NO 4	23/1/1	
I	PG239 (SINGLE SEAT)	8-12-98	

Drawing No. SW-90253

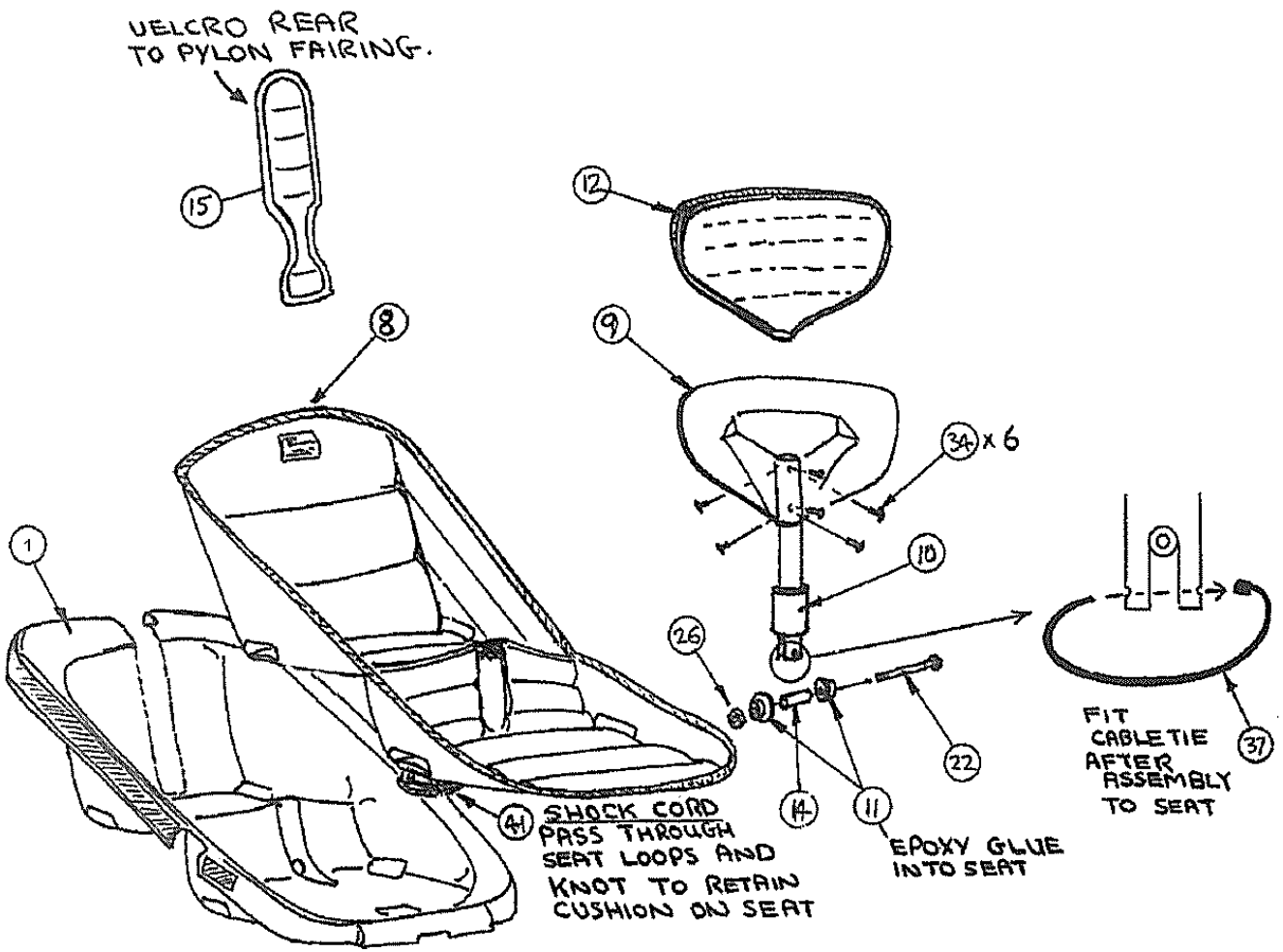

KEY CODE	DESCRIPTION	NUMBER OFF	DWG NO SW-	PART/FAST CODE
43	SPARE			
42	10NF x 3/8" BUT'N CHD (PVC PATCH)	1	N/A	EMSU-001
41	3mm SHOCK CORD 400mm		N/A	VSC3-001
40	M8 x 1.1/8" PLASTIC SADDLE	6	N/A	PMS-M8-11
39	10mm RAISED SNIFFY CAP	2	N/A	PMC-RSC10
38	10mm SNIFFY - RING ONLY	2	N/A	PMC-SR10
37	LONG BLACK CABLE TIE 4.8 x 280mm	1	N/A	HTW-001
36	6.5 10 x 22.25 OD NYLON WASHER	1	N/A	PWP-001
35	5mm 'P' TYPE NYLOCK NUT	1	N/A	FNMS-NP
34	3/16" DIA x 3/8" RIVET	8	N/A	FRS-12-001
32	VELCRO LOOP 50mm	1.8	N/A	UWSO-001
31	M10 MILD STEEL CURVED WASHER	1	N/A	FWM10-001
30	3/16 x 3/8 x [illegible]	8	N/A	FWS-12
29	8mm MILD STEEL WASHER FORM B	4	N/A	FWM8-B
28	1/4 T.3 LP WASHER	9	N/A	FW4-T3
27	6mm 'T' TYPE NYLOCK NUT	5	N/A	FNM6-NT
26	8mm 'T' TYPE NYLOCK NUT	6	N/A	FNM8-NT
25	M8 x 45mm HEX HT BOLT	4.2	N/A	FBM8-45
24	M8 x 20mm PAN HEAD SET SCREW	1	N/A	FMS8-20
23	M8 [illegible] SOCKET CAP SCREW	3	N/A	FCM8-18
22	M8 x 80mm HEX HT BOLT	5	N/A	FBM8-80
21	SINGLE SEAT CANTILEVER CUSHION SET	1	N/A	TQG-13111
20	CHOKE LEVER ARM	1	90477	ZMS-250
19	CHOKE LEVER PLATE	1	90476	ZMS-251
18	HAND THROTTLE LEVER PIVOT	1	90034	ZMS-014
17	HAND THROTTLE CASE	1	90032	ZMS-008
16	[illegible]	1	90033	ZMS-013
15	PASSENGER HEAD CUSHION	1		YQC-124
14	BACKREST PIVOT BUSH	1	89315	ZSP-033
13	DUAL IGNITION SWITCH BRACKET	1	90014	ZMS-155
12	BACKREST CUSHION COVER	1	89311	TQU-13120
11	BACKREST PIVOT BUSH SPACER	2	89310	ZMP-035
10	BACKREST TUBE	1	89309	TQU-13225
9	BACKREST			
8	SEAT CUSHION	1		YQC-123
7				
6			SDW43	TQG-13315
5	COLLER (INNER)	4	90229	ZMP-060
3	SEAT FRAME TUBE	2		YQC-121
2				
1	SEAT MOULDING	1		YQC-122

J	REMOVE 40 & 41	23/11/11	Mod.
H	PG239 (SINGLESEAT)	8.12.98	[illegible]
G	FILTER OPTIONS	7.8.98	[illegible]
F	ITEM 7	06/08/98	[illegible]
E	OPTIONAL ITEMS MAY 97	7/98	[illegible]
D	NEW SEAT FRAME	22/10/95	[illegible]

SOLAR WINGS AVIATION Ltd
Elm Tree Park
Manton, Marlborough
Wiltshire SN8 1PS
Tel; 0672 861578

	Date	Name
Drawn	110693	T.CLARKE
Approved	8/12/93	[illegible]
Checked	9/12/93	[illegible]

SHEET 2 of 2 – BACKREST AND CUSHIONS

SUB-ASSEMBLY

SEAT

Iss.	Description of revision	Date	Approved
C	OPTIONAL ITEMS	061195	[illegible]
B	BRAKE POS. CHANGE	070795	[illegible]
A	INITIAL ISSUE	110693	[illegible]

Drawing No.
SW-90253

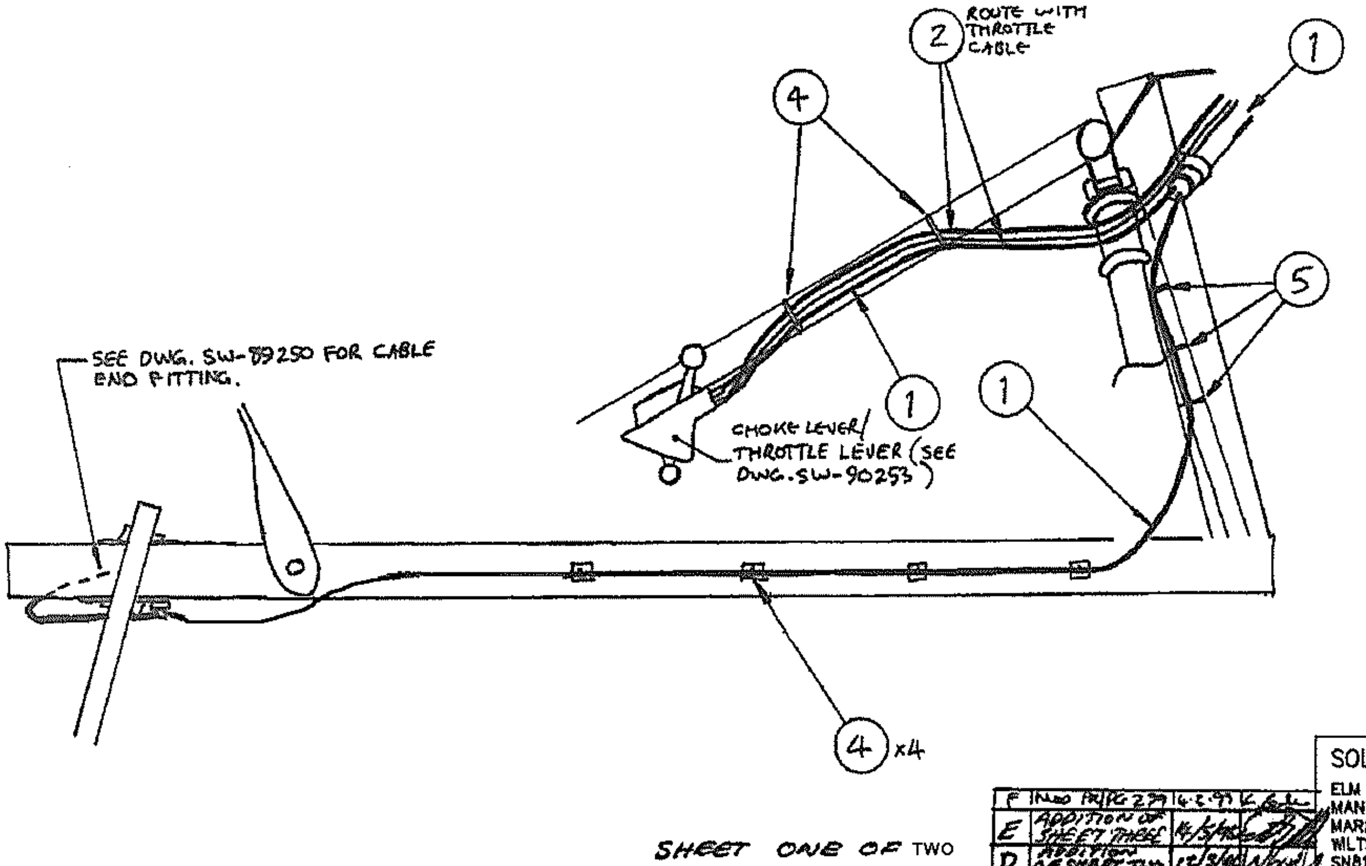

ITEM	DESCRIPTION	NUMBER OFF	DWG NO SW-	PART/FAST CODE
10	CHOKE CABLE	1	[illegible]	[illegible]
9	THROTTLE CABLE	1	[illegible]	[illegible]
	↑ ROTAX 912 FOUR STROKE ↑			
8	CHOKE CABLE (OPTIONAL)	1	90414	TGB-16210
7	THROTTLE CABLE	1	90413	TGB-16210
	↑ ↑			
	SINGLE CARBURETTOR			
2	CHOKE CABLE (OPTIONAL)	1	90259	TGB-16205
1	THROTTLE CABLE	1	90258	TGB-16215
	↑ ↑			
	TWIN CARBURETTOR			
6	STANDARD GROMMET TPR	1	—	PNM-014
5	LONG BLACK CABLE TIE 4.6x280mm	3	—	HTW-001
4	SHORT CABLE TIE 3.5x180mm	8	—	HTW-002
3	1" WHITE 'P' CLIP	1	—	HCC-005

SOLAR WINGS AVIATION Ltd
ELM TREE PARK,
MANTON,
MARLBOROUGH,
WILTSHIRE,
SN81PS

	Date	Name
Drawn	110893	T.CLARKE
Approved	29/07/94	[illegible]
Checked	29/07/94	[illegible]

Iss.	Description of revision	Date	Approved
F	[illegible]	[illegible]	[illegible]
E	ADDITION OF SHEET THREE	[illegible]	[illegible]
D	ADDITION OF SHEET TWO	[illegible]	[illegible]
C	OPTIONAL ITEMS	06/1/95	[illegible]
B	ADD PG 42.	25/7/95	[illegible]
A	INITIAL ISSUE	290894	[illegible]

SUB-ASSEMBLY

THROTTLE AND CHOKE

Drawing No. SW-90257/1

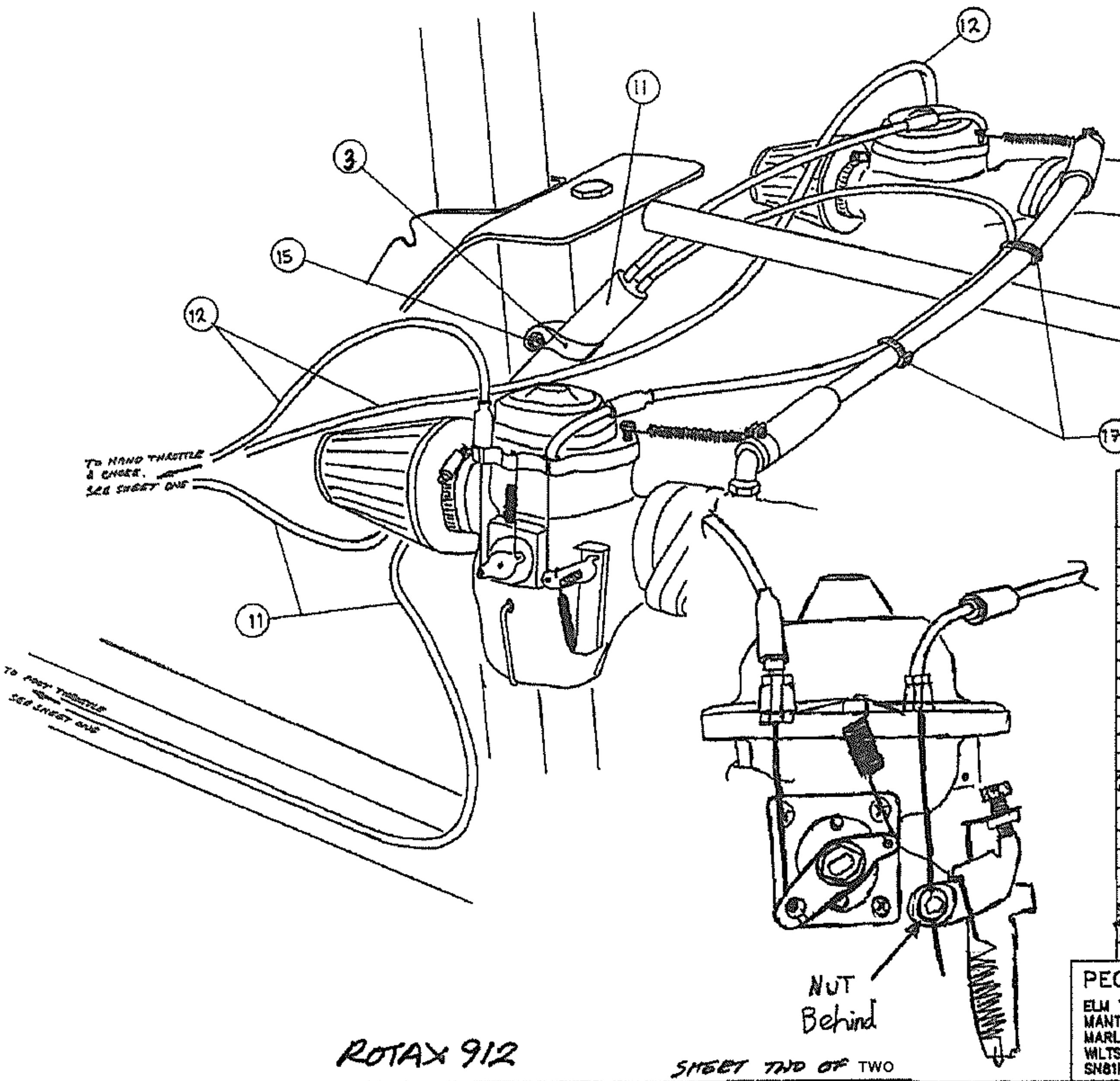

ITEM	DESCRIPTION	NUMBER OFF	DWG NO SW-	PART/FAST CODE
21	CHOKE CABLE	1		TBC-16 215
20	THROTTLE CABLE	1		TBC-16 205
19	PLASTIC Y-PIECE	1		EFLC-11
18	PLASTIC HOSE (⅜")	1.07		EFLH-8
17	TIE WRAP	2		HTW-001
16	THROTTLE/CHOKE BRACKET.	.		—
15	NYLOC NUT M6	1		FNM6-NT
14	HOSE CLAMP	3		HC19-001
13	TYRAP	5		HTW-003
12	CHOKE CABLE	1	90505	TBC-16[illegible]
11	THROTTLE CABLE	1	90504	TBC-16[illegible]

F NWO PR/PG 279 6.3.99

PEGASUS AVIATION
ELM TREE PARK,
MANTON,
MARLBOROUGH,
WILTSHIRE,
SN81PS.

	Date	Name
Drawn	12/3/96	S Tuckerman
Approved	12/3/96	[illegible]
Checked	23/3/96	[illegible]

Iss.	Description of revision	Date	Approved
E	ADDITION OF SHEET THREE.	14/9/97	[illegible]
D	ADDITION OF THIS SHEET.	12/3/96	[illegible]
A	INITIAL ISSUE	12/3/96	[illegible]

Drawing No. SW-90257/2

SUB-ASSEMBLY THROTTLE AND CHOKE

FOUR POINT SHOULDER YOKE
FOR GERMAN SPEC. AIRCRAFT.
THREE POINT SHOULDER YOKE
FOR UK SPEC. AIRCRAFT.

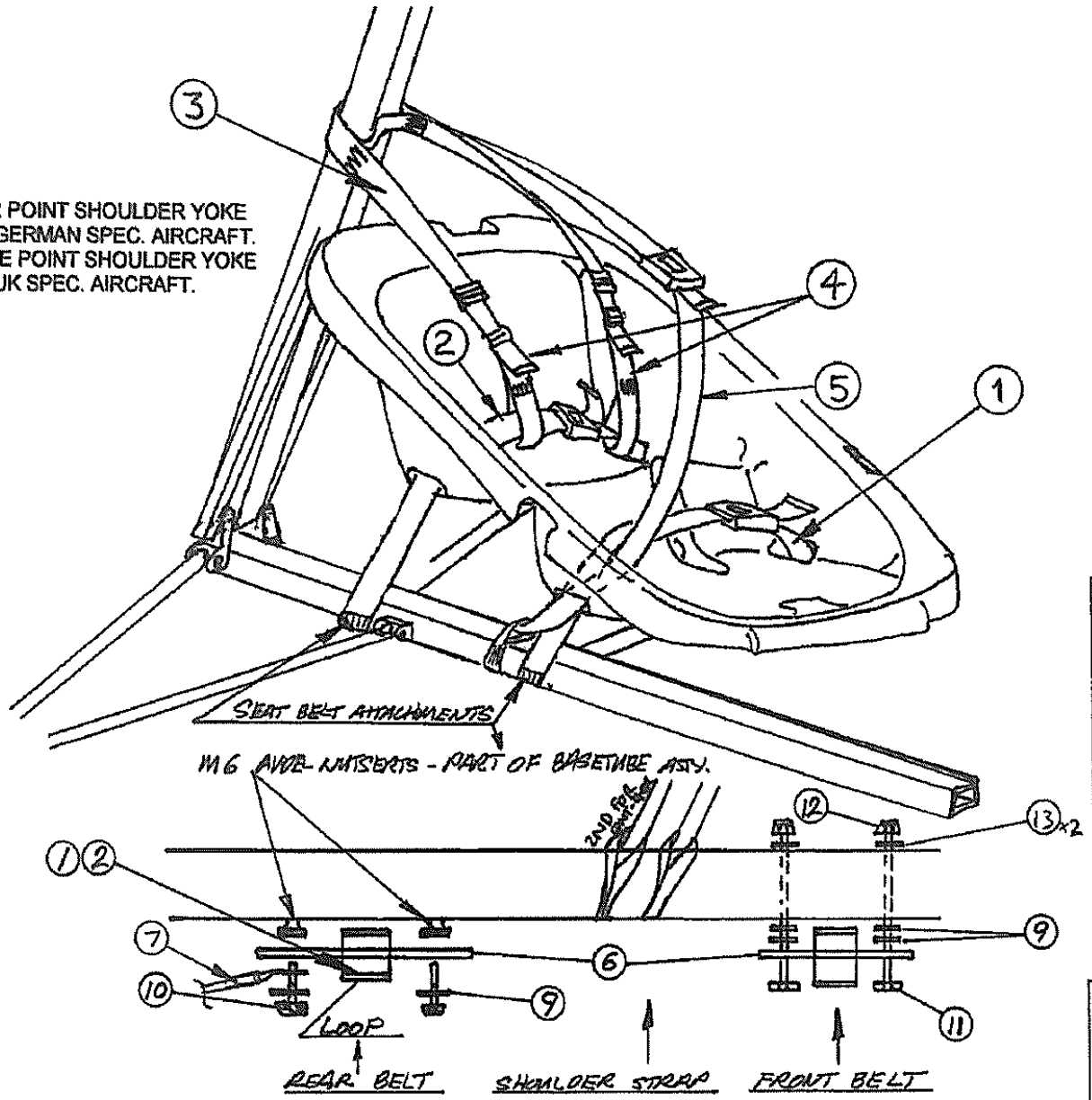

ITEM	DESCRIPTION	QUANTITY UK	QUANTITY GER	PART NO.
13	1/4" T4LP WASHER	2	2	FW4-T4
12	M6 T TYPE NYLOC NUT	2	2	FNM6-NT
11	M6 x 80mm HEX BOLT	2	2	FBM6-80
10	M6 x 20mm HEX BOLT	2	2	FBM6-20
9	1/4" T3LP WASHER	6	6	FW4-T3
7	EARTH CABLE	1	1	LC-030
6	SEATBELT CLAMPING STRIP	2	2	ZMA-026
5	FRONT SHOULDER BELT	1	2	TQU-13441
4	ADJUSTMENT BELT	2	2	TQU-13430
3	SHOULDER YOKE GER. SPEC. SHOULDER YOKE	1	1	TQU-13442 TQU-13443
2	REAR LAP BELT	1	1	TQU-13420
1	FRONT LAP BELT	1	1	TQU-13410

SOLAR WINGS AVIATION Ltd
ELM TREE PARK
MANTON
MARLBOROUGH
WILTSHIRE
SN8 1SP

	Date	Name
Drawn	11/06/93	
Approved		
Checked	23/4/96	

Iss.	Description of revision	Date	Approved
c	MOD 90259	5.2.99	
b	ITM (11) CHANGE/ADD ITM (13)	3/7/96	
a	Initial	11/06/93	

SUB-ASSEMBLY

SEAT BELT

QMSBA-0

Drawing No. SW-90260

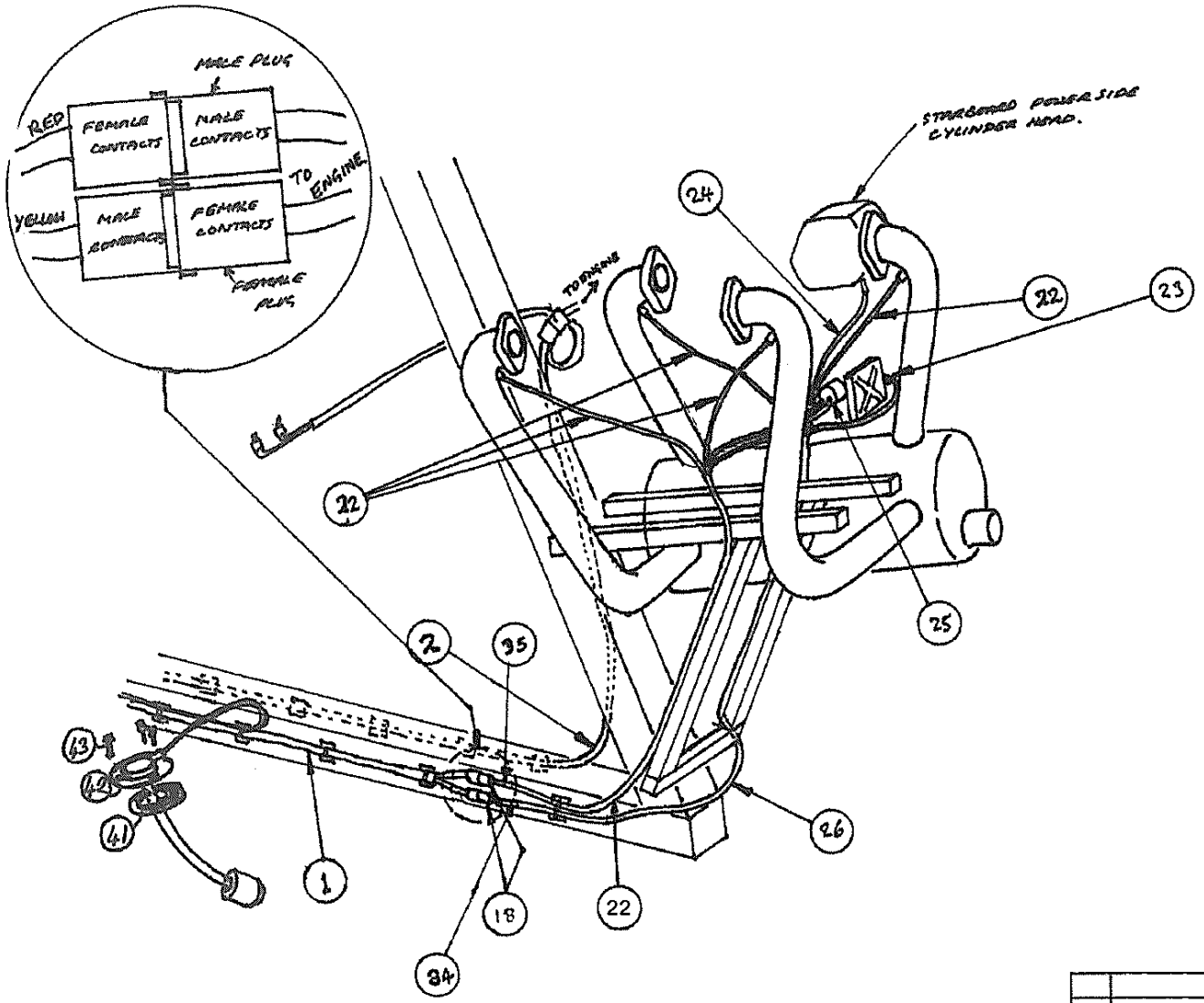

Number	DESCRIPTION / MATERIAL	Quantity	PART NO/ MAT CODE
41	YSI 80mm ±1000	1	IFYSI-3
40	35V 2200mF CAPACITOR	1	LT-029
39	BATTERY STATE MONITOR	1	IEBSM-1
38	FUEL GAUGE	1	EFG-5
37	MALE CRIMP CONNECTOR	12	LT-013
36	FEMALE CRIMP CONNECTOR	14	LT-012
35	RED HEAT SHRINK	100mm	PHSB-002
34	YELLOW HEAT SHRINK	100mm	PHSB-003
33	15 AMP FUSE	2	LF-009
32	CRIMP CONNECTORS	4	LT-006
31	16AMP RATED CABLE	A/R	LC-011
30	FUSE HOLDER	2	LF-005
29	EYELET CRIMP CONNECTOR	1	LT-020
26	SLEEVING	A/R	LR-002
25	OIL PRESS. – WITH FLYDAT		
24	CHT – WITH FLYDAT		
23	OIL TEMP GAUGE	1	965 530
22	EGT – WITH FLYDAT		
21	CRIMP CONNECTORS	36	LT-038
19	HEAT SHRINK	50mm	PHS3-001
18	ITT PLUG & SOCKET	1	LT-007/8
17	COMMONING BLOCKS	A/R	LT-033/34
16	TEMP. SENSORS (OPTIONAL)	2	IEAT-001
15	10AMP KEY SWITCH	1	LS-008
14	10AMP PRESS SWITCH	1	LS-007
13	912 FLYDAT	1	IFLYD-5
12	WINTER ASI	1	IFASI-5
11	COMPASS	1	IFCOM-1
10	ALTIMETER	1	IFALT-4
9	CRIMP EYELET HEAVY DUTY	1	LT-035
8	EARTH WIRE	1	LC-029
7	BATTERY 8AL LEAD ACID	1	LB-004
6	BATTERY STRAP	1	TQB-18151
5	DUCATI REGULATOR	1	965 345/ 965 335
4	STARTER CABLE	1	LC-050
3	SHORT CABLE TIE	3	HTW-002
2	POWER LOOM	1	TQU-16534
1	SIGNAL LOOM	1	LC-051

Iss.	Description of revision	Date	Approved
G	ADD PART No	23/1/1	Mabi
F	CHANGE PART No	23/1/1	Mabi
E	ADD PART NUMBERS	21/1/00	Cpeake

	Date	Name
Drawn	270396	S.TUDDENHAM
Checked		

DIM. IN mm | SCALE: NTS
GEN. TOL. +-:

PEGASUS AVIATION

Drawing No. SW-90561

SUB-ASSEMBLY ELECTRICAL/INSTRUMENT SHEET 2 OF 2

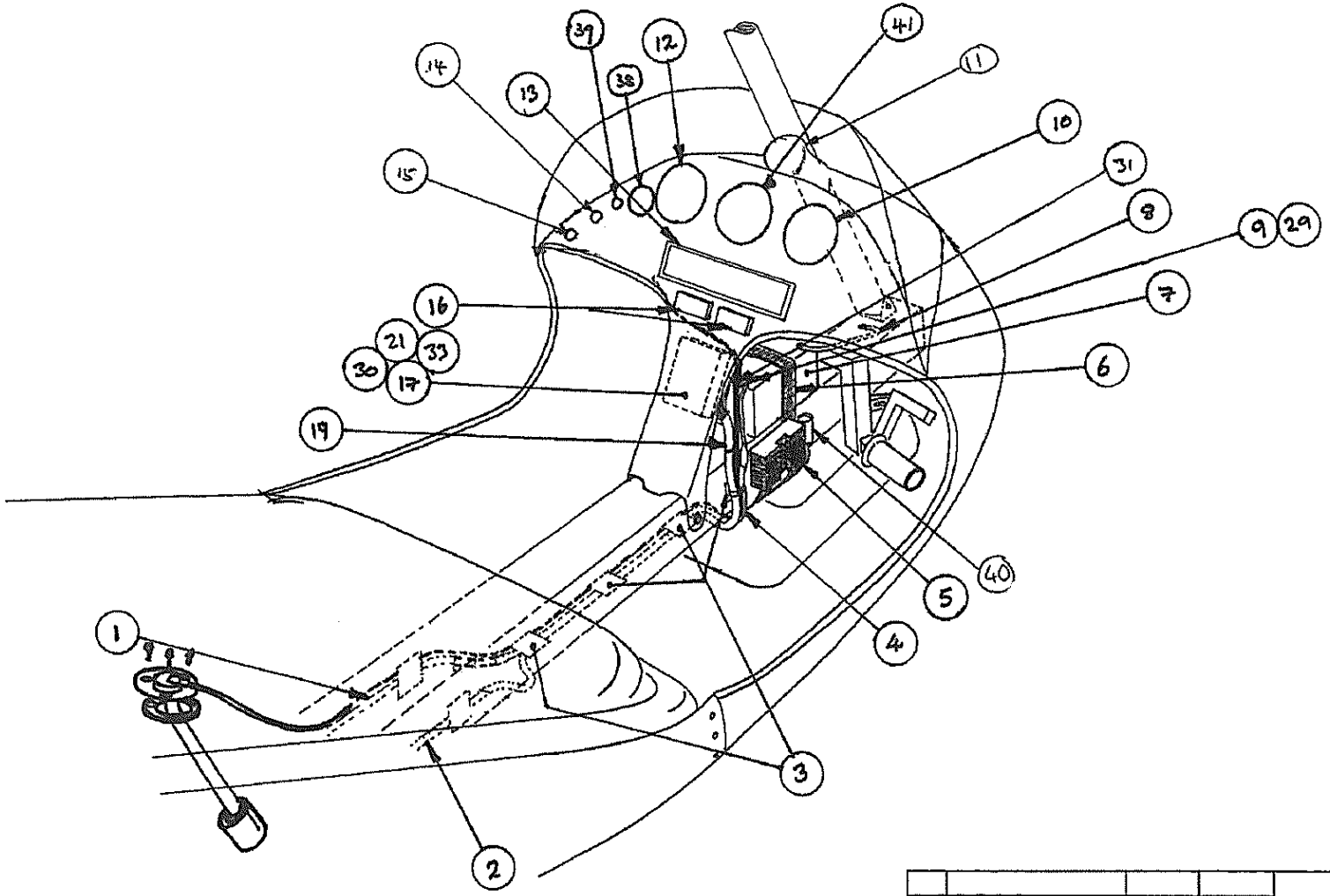

					Date	Name
				Drawn	270396	S.TUDDENHAM
				Checked	3/2/00	
F	ADD PART NO 41	22/1/1	Mark	PEGASUS AVIATION		
E	ADD PART NUMBERS	21/1/00	L.Brake			
Iss.	Description of revision	Date	Approved	Drawing No.		
DIM. IN mm SCALE: NTS				SW–90561		
GEN. TOL. +–:						

SUB–ASSEMBLY | ELECTRICAL/INSTRUMENT SHEET 1 OF 2

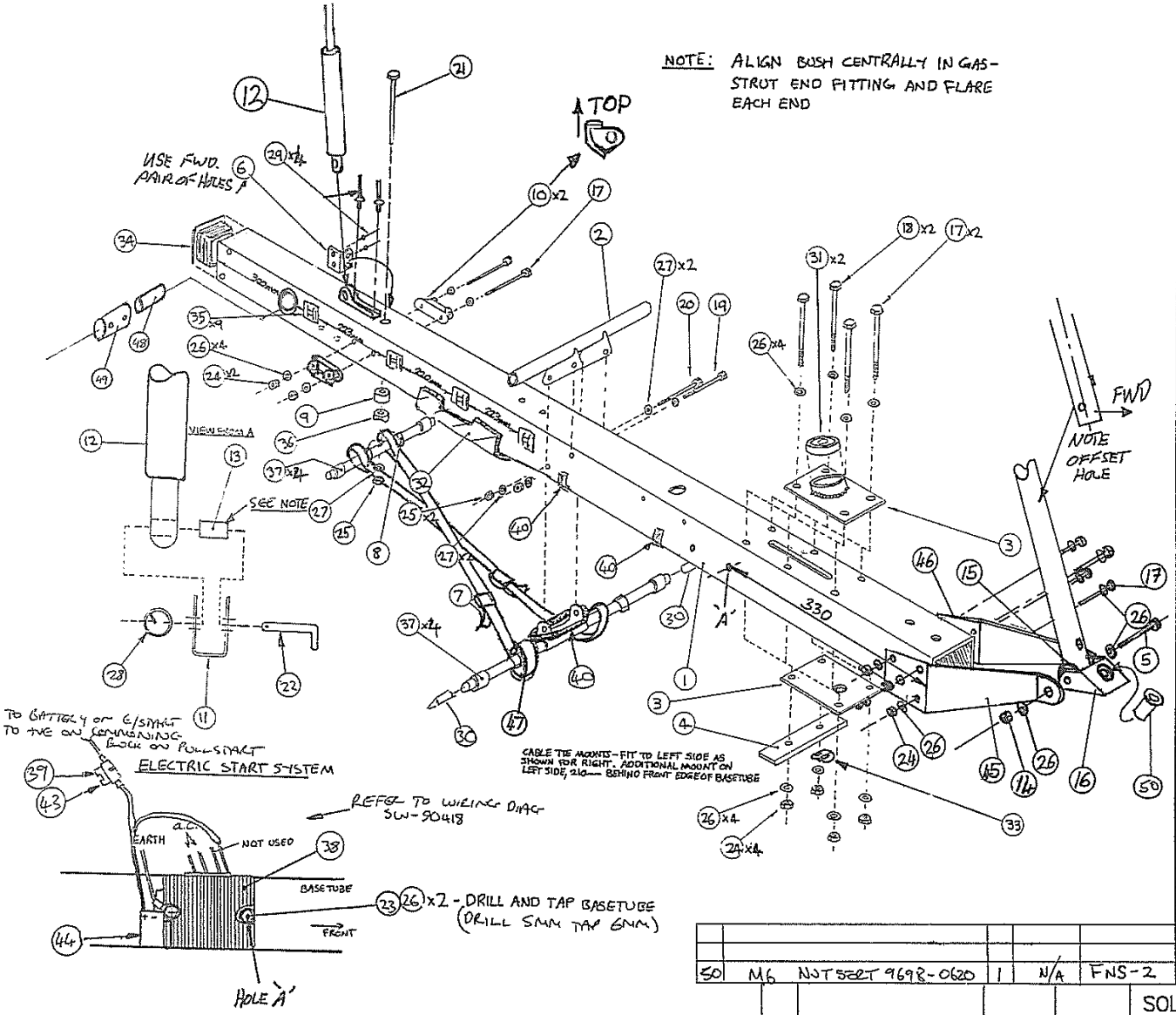

KEY CODE	DESCRIPTION	NUMBER OFF	DWG NO SW-	PART/FAST CODE
49	BUSH TUBE SLEEVE			ZMA-166
48	PYLON/BASE TUBE BUSH TUBE			ZMS-016
47	FUEL TANK STRAP	2		TQB-20601
46	FRONT STRUT PLATE RH	1		YQC-081R
45	FRONT STRUT PLATE LH	1		YQC-081L
44	CAPACITOR	1	N/A	LT-029
43	ISAMI BLADE FUSE	1	N/A	LF-009
42	SKIFFY RING	1	N/A	PMC-SBG
41	SKIFFY CAP	1	N/A	PMC-RSG6
40	STICKY BACKED FOAM	0.5M	N/A	PSS-001
39	FUSE HOLDER (OPTIONAL)	2	N/A	LF-005
38	RECTIFIER REGULATOR (OPTIONAL)	1	N/A	264 870
37	RUBBER SPACER	8	N/A	ZSP-057
36	1.125" x M8 SMALL SADDLE	1	N/A	PMS-M8-11
35	CABLE TIE MOUNT	9	N/A	HTM-001
34	2.5" SQUARE END PLUG	2	N/A	PES-001
33	1/2" WHITE P-CLIP	1	N/A	HCC-003
32	22mm CLOSED CELL POLYTHENE PIPE LAGGING	.21m	N/A	PTM19-001
31	6300-2RS-C3B BEARING	2	N/A	BEA-BB-2
30	BASIC POD SUPPORT BUNG (S03/B12 ONLY)	2	N/A	ZMP-075
29	3/16" DIA x 3/8" AVDEL	4	N/A	FR6-12-002
28	5/8" SAFETY RING	1	N/A	FPSR-001
27	8mm WASHER FORM B	5	N/A	FWM8-B
26	1/4" WASHER T3LP (SOME OPTIONAL)	19	N/A	FW4-T3
25	8mm 'T' TYPE NYLOCK NUT	3	N/A	FNM8-NT
24	6mm 'T' TYPE NYLOCK NUT	9	N/A	FNM6-NT
23	M6 x 16mm HEX HT BOLT (OPTIONAL)	2	N/A	FBM6-16
22	QUICK PIN	1	N/A	FP-005
21	M8 x 120mm HEX HT BOLT	1	N/A	FBM8-120
20	M8 x 85mm HEX HT BOLT	1	N/A	FBM8-85
19	M8 x 80mm HEX HT BOLT	1	N/A	FBM8-80
18	M6 x 85mm HEX HT BOLT	2	N/A	FBM6-85
17	M6 x 80mm HEX HT BOLT	8	N/A	FBM6-80
16	QUIK POD MOUNT CHANNEL	1		ZCH-029
15	PLASTIC WASHER	2		FWP-008
14	1/4" UNF T NYLOC NUT	1		FNU4-NT
13	BUSH	1	90303	ZBB-006
12	GAS STRUT (OPTIONAL)	1	90281	HGS-001
11	GAS STRUT CHANNEL (LOWER)	1	90231	ZMS-174
10	DRAG LINK CHANNEL	2	90209	ZMS-169
9	FUEL TANK REAR SUPPORT SPACER	1	89260	ZMP-032
8	FUEL TANK REAR SUPPORT TUBE	1	89259	TQU-17620
7	FUEL TANK BRAKET COMPLETE	1	89258	TQU-17610
6	BRAKE CABLE BRACKET	1	89255	ZAN-003
5	FBU4-24 (CUT)	1		FBU4-24
4	STEERING STOP	1	89252	ZMP-019
3	STEERING HEAD PLATE	2	89230	TQU-18610
2	SEAT BASE BRACKET	1	89218	TQU-13340
1	QUANTUM/QUIK BASETUBE	1	90245	TQB-11100
50	M6 NUTSERT 9698-0620	1	N/A	FNS-2

PEGASUS QUIK

SUB-ASSEMBLY | BASETUBE

D	ADDITION OF NUTSERT	21/10/05
C	BUSH TUBE SL. MOD 147	16/05/05
B	65L TANK MOD 130	22/11/04
A	INITIAL	21/8/02

SOLAR WINGS AVIATION Ltd
Elm Tree Park
Manton, Marlborough
Wiltshire SN8 1PS
TEL: 0672 861578

	Date	Name
Drawn	21/8/02	
Checked	30/11/04	

Drawing No. YQC-080

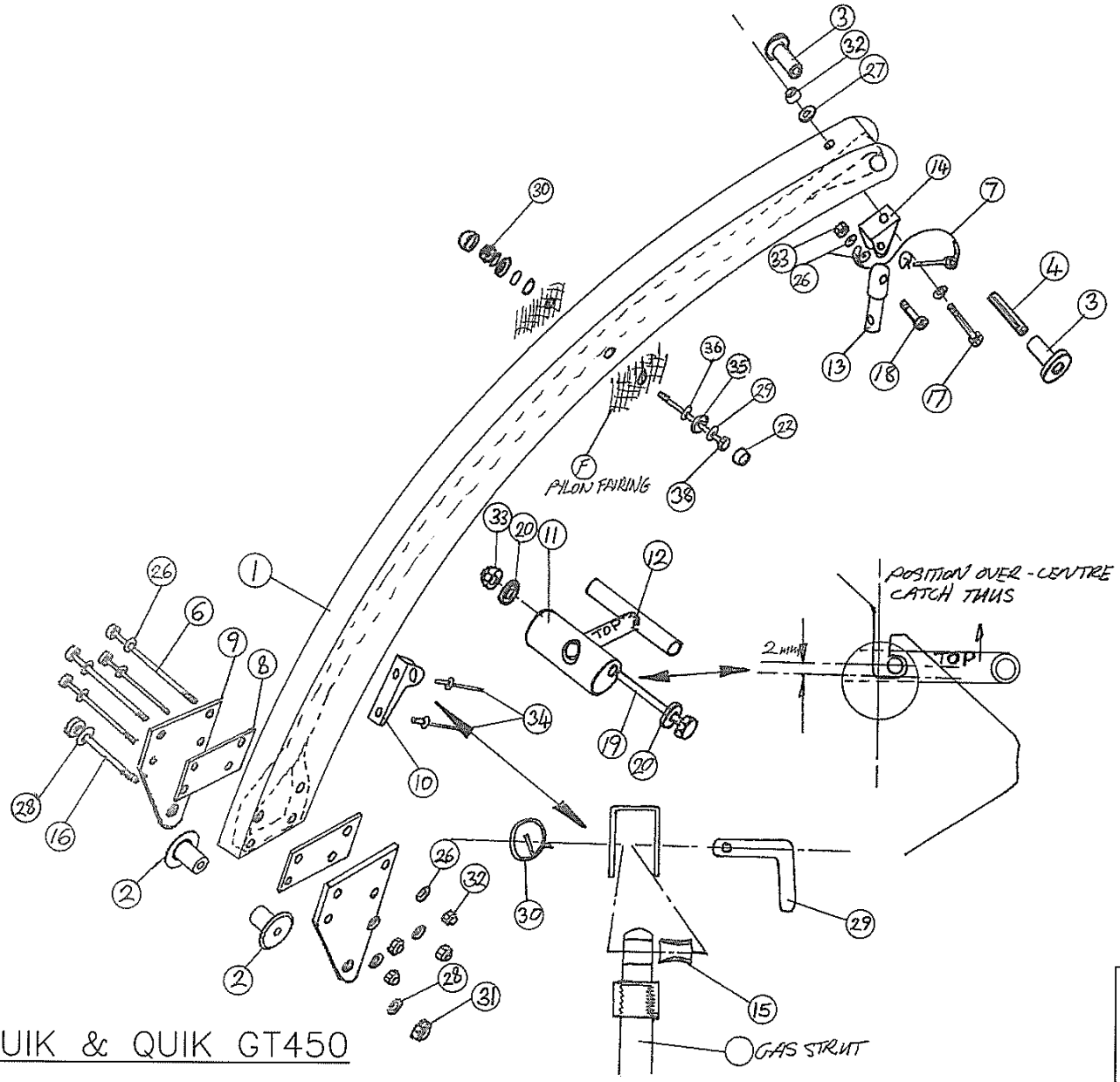

KEY CODE	DESCRIPTION	NUMBER OFF	DWG NO SW–	PART/DWG NUMBER
38	M6 x 85mm HEX HT BOLT	1	N/A	FBM6–85
37	SPARE			
36	PLASTIC WASHER 6mm X 1mm	2	N/A	FWP–005
35	M6 SKIFFY RING	2	N/A	PMC–RSC6
34	3/16" DIA x 3/8" MONEL	2	N/A	FR6–12–001
33	8mm 'T' TYPE NYLOCK NUT	1	N/A	FNM8–NT
32	8mm 'P' TYPE NYLOCK NUT	5	N/A	FNM8–NP
31	10mm 'T' TYPE NYLOCK NUT	1	N/A	FNM10–NT
30	6mm 'T' TYPE NYLOCK NUT	1	N/A	FNM6–NT
29	1/4" WASHER – T3LP	3	N/A	FW4–T3
28	10mm WASHER FORM B	4	N/A	FWM10–B
27	5/16" x 1" x 1/16" MILD STEEL WASHER	1	N/A	FW5–10
26	8mm WASHER FORM B	5	N/A	FWM8–B
25	M10 x 160mm HEX HT BOLT	1	N/A	FBM10–160
24	M8 x 100mm HEX HT BOLT	1	N/A	FBM8–100
23	M8 x 85mm HEX HT BOLT	1	N/A	FBM8–85
22	M8 SKIFFY CAP	2	N/A	PMC–RSC8
21	SPARE			
20	M8 SKIFFY RING	2	N/A	PMC–RSC8
19	AN5–36A	1	N/A	FBA5–36A
18	M8 X 55mm HEX HT BOLT	1	N/A	FBM8–55
17	M8 X 85mm HEX HT BOLT	1	N/A	FBM8–85
16	M10 X 110mm HEX HT BOLT	1	N/A	FBM10–110
15	GAS STRUT BUSH	1	90303	ZBB–006
14	CHANNEL	1	N/A	ZCH–017
13	KNUCKLE	1	N/A	ZKN–102
12	OVERCENTRE HANDLE	1	90233	ZMS–176
11	OVERCENTRE ROLLER	1	90227	ZMP–058
10	GAS STRUT CHANNEL (LOWER TYPE)	1	N/A	ZMS–174
9	PYLON LOWER PLATE	2	N/A	YQC–094
8	PYLON LOWER PLATE SPACER	2	N/A	YQC–095
7	UPPER KEEP PIN ASSEMBLY	1	85070	TQU–10250
6	M8 X 100mm HEX HT BOLT	4	N/A	FBM8–100
5	SPARE			
4	PYLON UPPER FACE BEARING BUSH	1	89269	ZBB–003
3	PYLON UPPER FACE BEARING	2	89265	ZMP–016
2	PYLON LOWER FACE BRG.	2	N/A	ZMP–136
1	QUIK PYLON COMPLETE	1	N/A	YQC–092

QUIK & QUIK GT450

P&M AVIATION LTD
UNIT B
CRAWFORD STREET
ROCHDALE OL16 5NU
TEL: 01706 655134

	Date	Name
Drawn	031202	WB
Approved	301104	TS
Checked	301104	TS

SUB–ASSEMBLY

PYLON

Iss.	Description of revision	Date	Approved
B	NEW LOWER BEARING & EDITORIAL CHANGES	280607	
A	INITIAL ISSUE	031202	WB

Drawing No.
YQC–090

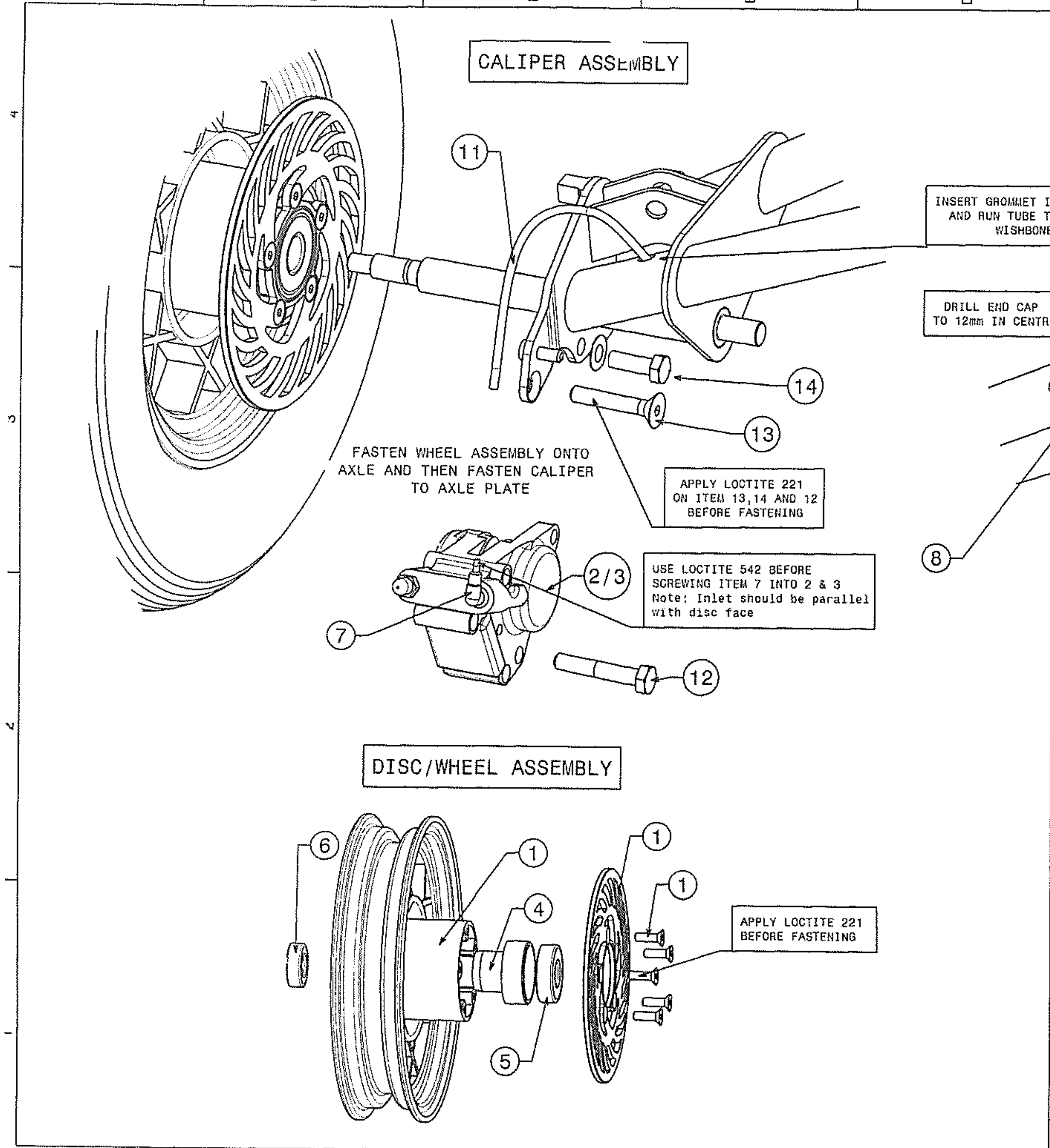

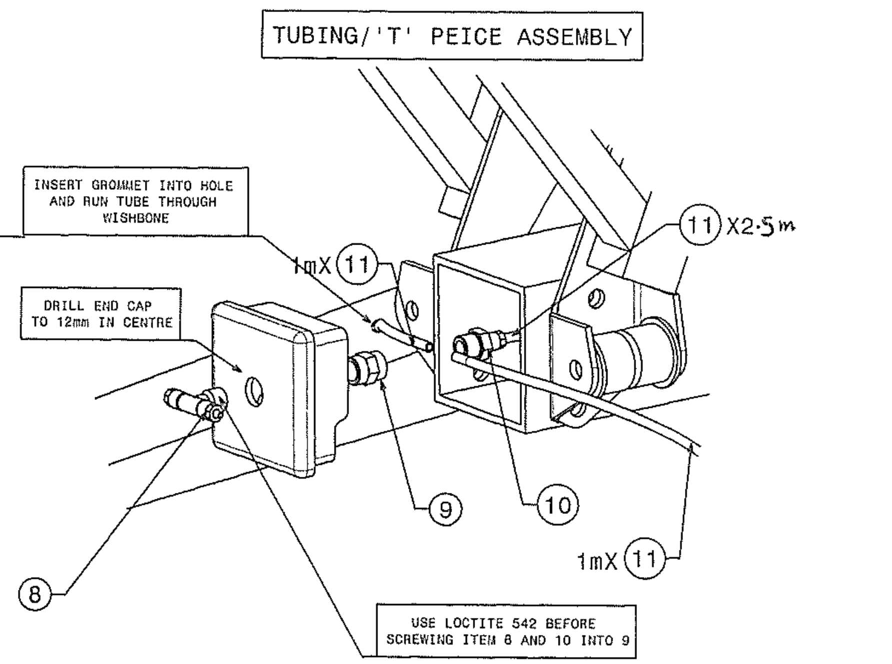

No.	Description	Qty	Material	Weight	Part No
16	M8 LIGHT WASHER	2			FWM8-L
15	10mm RUBBER GROMETS	4			PMM-047
14	M8x16 HT SET SCREW	2			FMS8-16
13	M8X45 COUNTER SUNK SKT SCREW	2			FMS8-45
12	M8X30 HEX HT BOLT	2			FBM8-30
11	NYLON HYDRAULIC TUBING	4·5			PTM6-002
10	STRAIGHT FITTING	1			PNF-001
9	SLEAVE ADAPTOR	1			PNF-004
8	TEE FITTING	1			PNF-003
7	ELBOW FITTING	2			PNF-002
6	BEARING 6201-2RS	2		XXXX	BEA-BB-5
5	BEARING 6201-2RS	2		XXXX	BEA-BB-7
4	BEARING CARRIER	2		XXXX	ZMA-060
3	30mm GRIMECA CALIPER (R/H)	1		XXXX	WW-018
2	30mm GRIMECA CALIPER (L/H)	1		XXXX	WW-017
1	GRIMECA 8" WHEEL (DISC)	2		XXXX	WW-12A

CALIPER & TUBE ASSY

QUIK / QUANTUM DISC BRAKES

Iss	Description	Date	Apprvd
C	XXX	XXXXXX	
B	XXX	XXXXXX	
A	INITIAL ISSUE	241103	[signature]

PEGASUS
ELM TREE PARK MANTON
MARLBOROUGH
WILTSHIRE SN8 1PS
TEL:01672 861350 TEL:01672861328

	Date	Name
Drawn	251103	[signature]
Apprvd	251103	EGB
Checked	28/11/03	[signature]

Scale: 1:3 Jig No: NONE

Drawing No. YQC-091

DIM IN mm GEN TOL: NONE UNLESS OTHERWISE SPECIFIED

Proj:

Substituted for:
Replaced by:

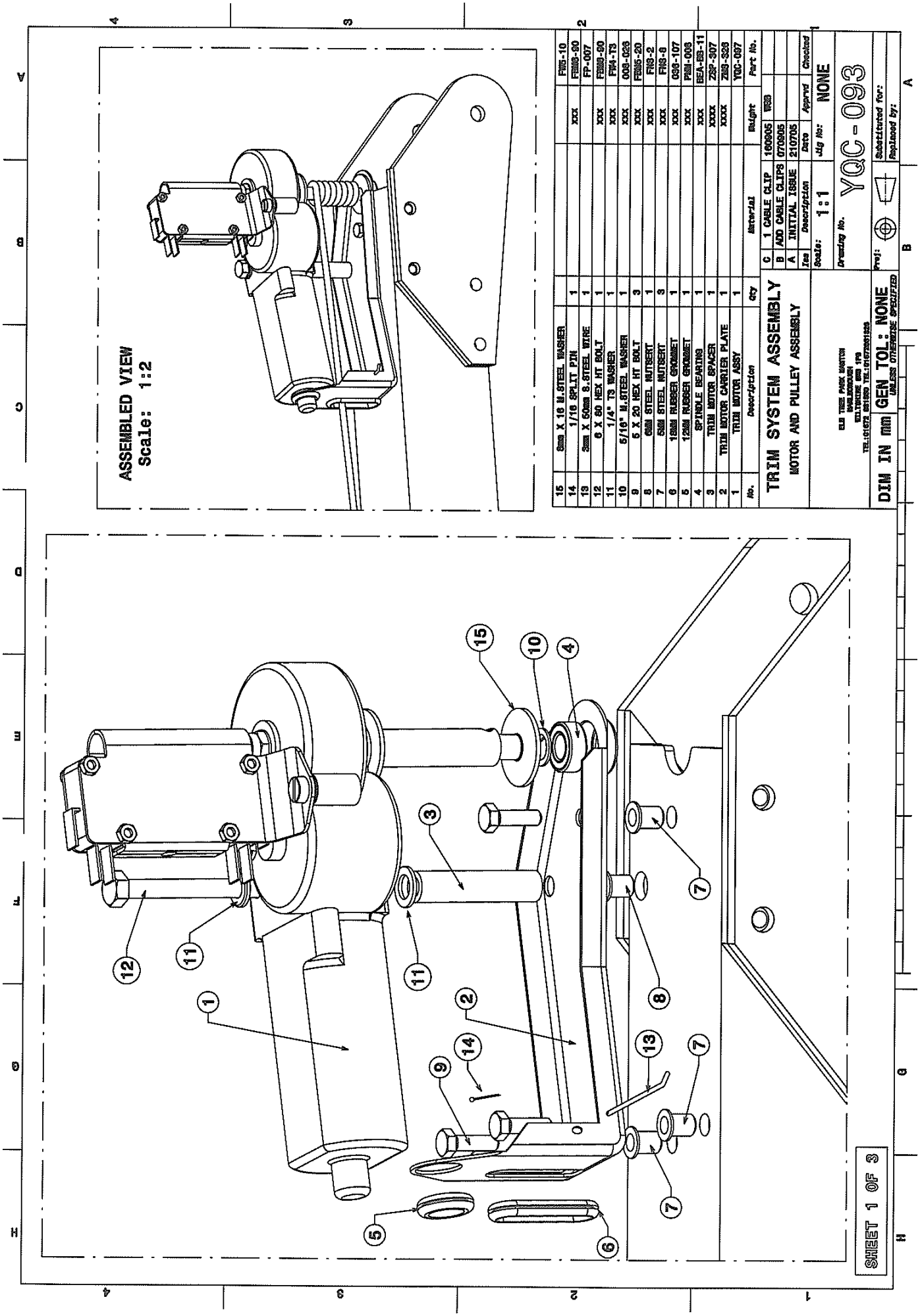
ASSEMBLED VIEW
Scale: 1:2
TRIM SYSTEM ASSEMBLY
MOTOR AND PULLEY ASSEMBLY
DIM IN mm GEN TOL: NONE
UNLESS OTHERWISE SPECIFIED
Drawing No. YQC-093
Scale: 1:1
Mtg No: NONE
SHEET 1 OF 3

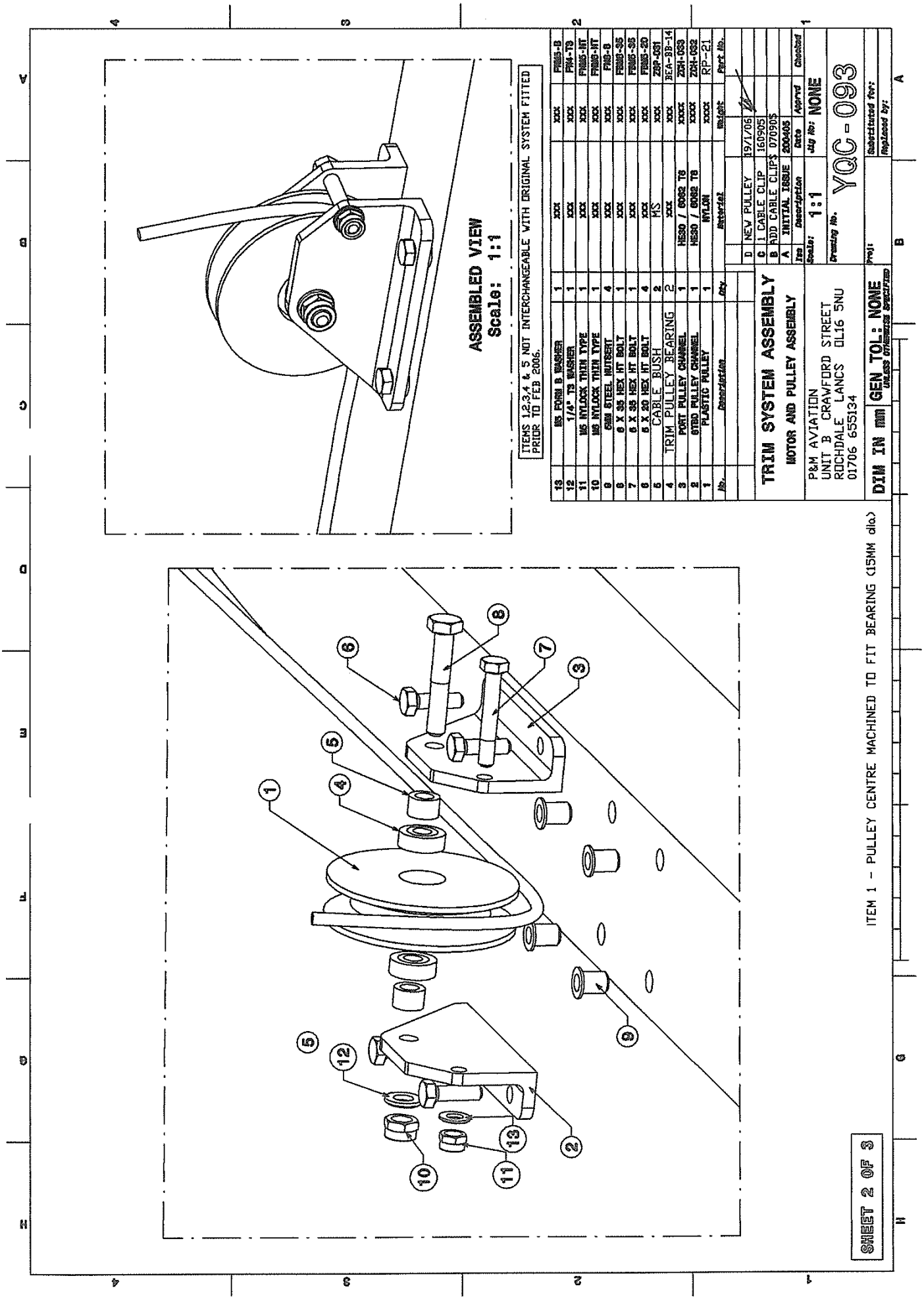
ASSEMBLED VIEW
Scale: 1:1
ITEMS 1,2,3,4 & 5 NOT INTERCHANGEABLE WITH ORIGINAL SYSTEM FITTED PRIOR TO FEB 2006.
TRIM SYSTEM ASSEMBLY
MOTOR AND PULLEY ASSEMBLY
P&M AVIATION
UNIT B CRAWFORD STREET
ROCHDALE LANCS OL16 5NU
01706 655134
Scale: 1:1
Drawing No. YQC-093
Proj: NONE
DIM IN mm
GEN TOL: NONE
ITEM 1 - PULLEY CENTRE MACHINED TO FIT BEARING (15MM dia.)
SHEET 2 OF 3

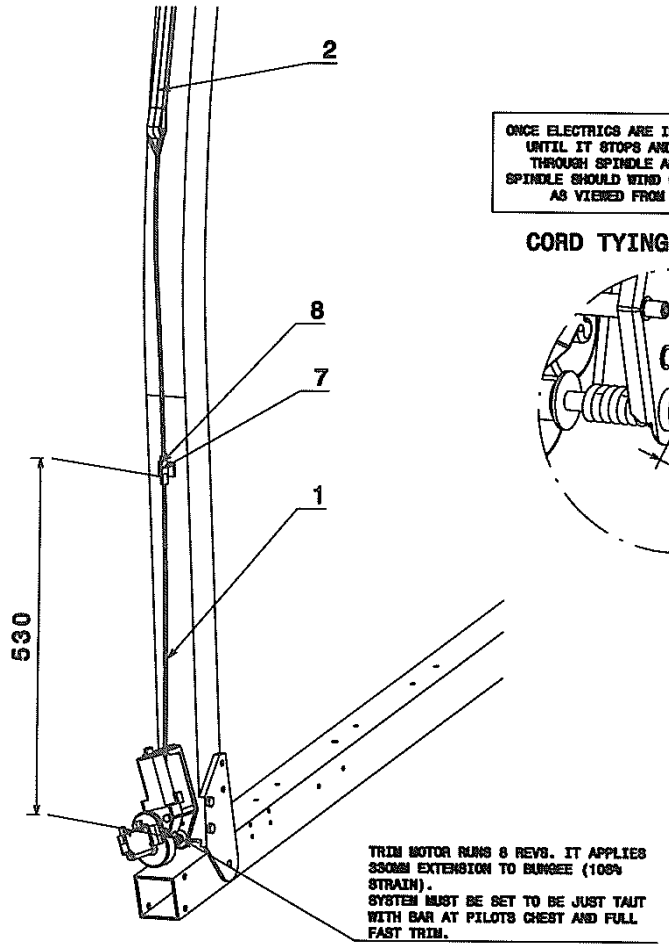

ONCE ELECTRICS ARE IN PLACE WIND TRIM DOWN UNTIL IT STOPS AND THEN THREAD ITEM 1 THROUGH SPINDLE AND TIE OFF AS SHOWN SPINDLE SHOULD WIND CORD COUNTER CLOCKWISE AS VIEWED FROM REAR OF THE A/C

CORD TYING OFF DETAIL

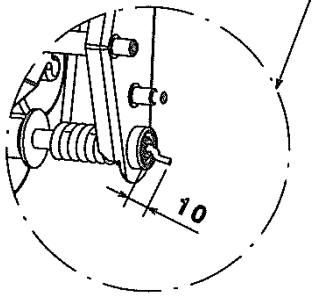

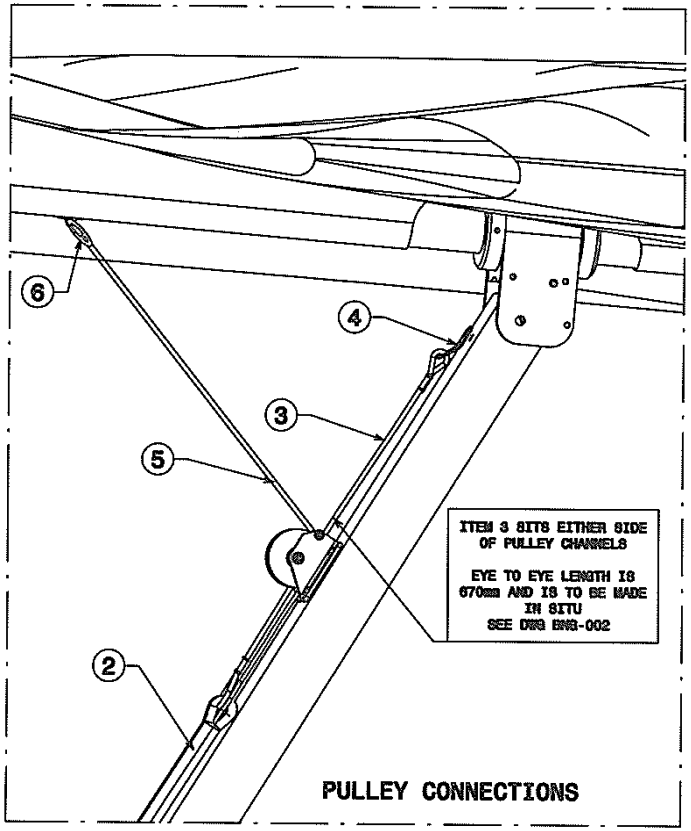

ITEM 3 SITS EITHER SIDE OF PULLEY CHANNELS

EYE TO EYE LENGTH IS 670mm AND IS TO BE MADE IN SITU
SEE DRG BMB-002

PULLEY CONNECTIONS

No.	Description	Qty	Material	Weight	Part No.
10	XXX		XXX	XXX	XXX
9	XXX		XXX	XXX	XXX
8	PVC TUBE, 35MM LONG	70mm	XXX	XXX	PTI16-003
7	CABLE CLIP, ADHESIVE	2	XXX	XXX	HTW-003
6	220KG MAILLON RAPIDE	1	XXX	XXX	RA-8
5	KEEL TO BUNGEE PULLEY CORD	1	XXX	XXX	TCL-002
4	2 HOLE 30 DEG BENT TANG	1	XXX	XXX	RT-2H-HD3
3	TRIM LOOP TENSION BUNGEE	750MM	5MM SHOCK CORD	XXXX	VSC5-001
2	TRIM SYSTEM BUNGEE LOOP	1	XXXX	XXXX	BMB-001
1	TRIM WINCH CORD	1	XXXX	XXXX	TCL-001

TRIM SYSTEM ASSEMBLY

MOTOR AND PULLEY ASSEMBLY

Iss	Description	Date	Apprvd	Checked
C	1 CABLE CLIP	160905	WSB	
B	ADD CABLE CLIPS	070905		
A	PROTOTYPE	200405		

Scale: 1:1 Jig No: NONE

Drawing No. YQC-093

ELM TREE PARK MANTON
MARLBOROUGH
WILTSHIRE SN8 1PS
TEL:01672 861900 TEL:01672861899

DIM IN mm GEN TOL: NONE UNLESS OTHERWISE SPECIFIED

Proj:

Substituted for:

Replaced by:

SHEET 3 OF 3

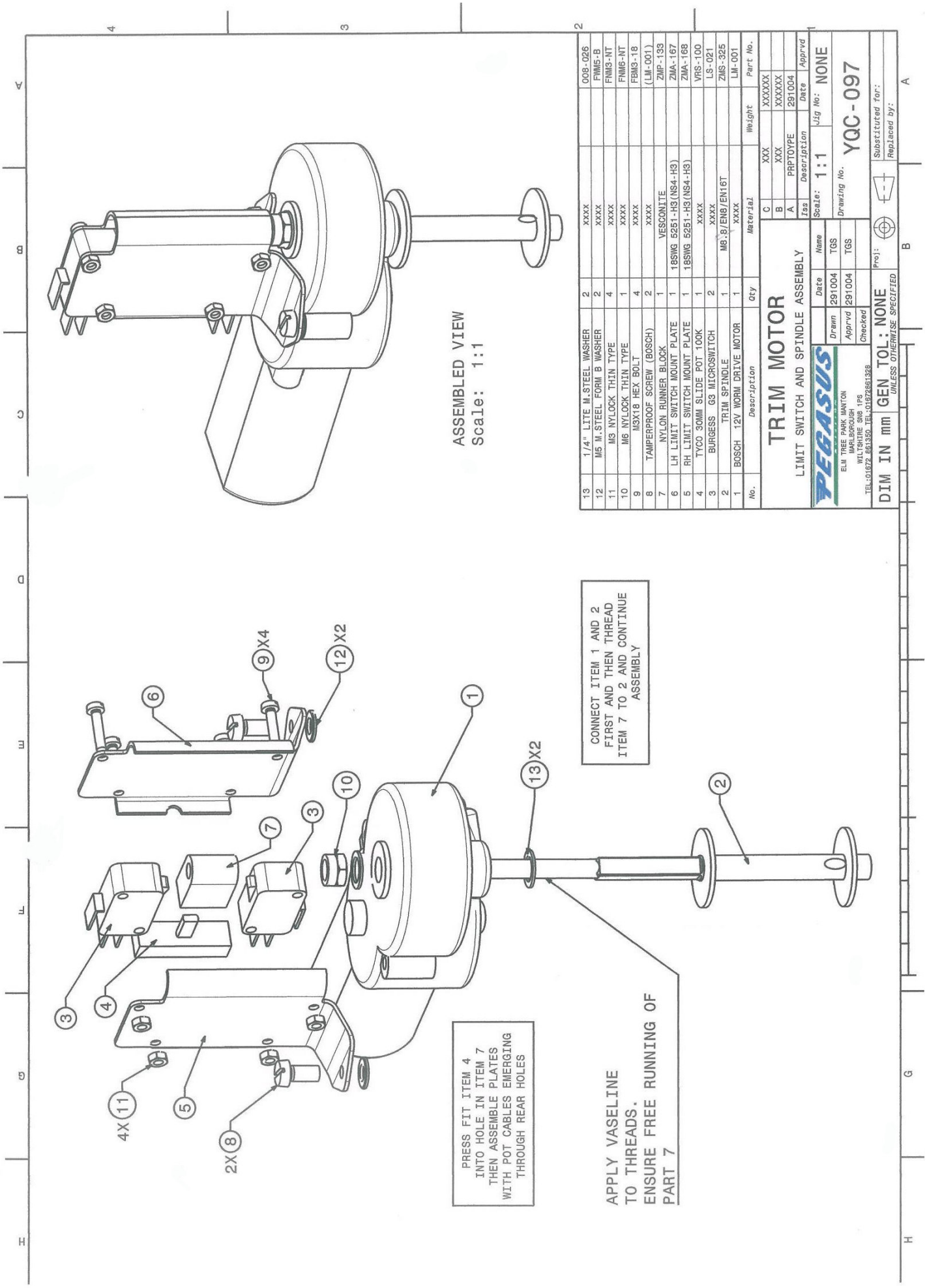

No.	Description	Qty	Material	Weight	Part No.
13	1/4" LITE M.STEEL WASHER	2	xxxx		008-026
12	M5 M.STEEL FORM B WASHER	2	xxxx		FWM5-B
11	M3 NYLOCK THIN TYPE	4	xxxx		FNM3-NT
10	M6 NYLOCK THIN TYPE	1	xxxx		FNM6-NT
9	M3X18 HEX BOLT	4	xxxx		FBM3-18
8	TAMPERPROOF SCREW (BOSCH)	2	xxxx		(LM-001)
7	NYLON RUNNER BLOCK	1	VESCONITE		ZMP-133
6	LH LIMIT SWITCH MOUNT PLATE	1	18SWG 5251-H3(NS4-H3)		ZMA-167
5	RH LIMIT SWITCH MOUNT PLATE	1	18SWG 5251-H3(NS4-H3)		ZMA-168
4	TYCO 30MM SLIDE POT 100K	1	xxxx		VRS-100
3	BURGESS G3 MICROSWITCH	2	xxxx		LS-021
2	TRIM SPINDLE	1	M8.8/EN8/EN16T		ZMS-325
1	BOSCH 12V WORM DRIVE MOTOR	1	xxxx		LM-001

Iss	Description	Date	Apprvd
C	XXX	XXXXXX	
B	XXX	XXXXXX	
A	PRPTOYPE	291004	

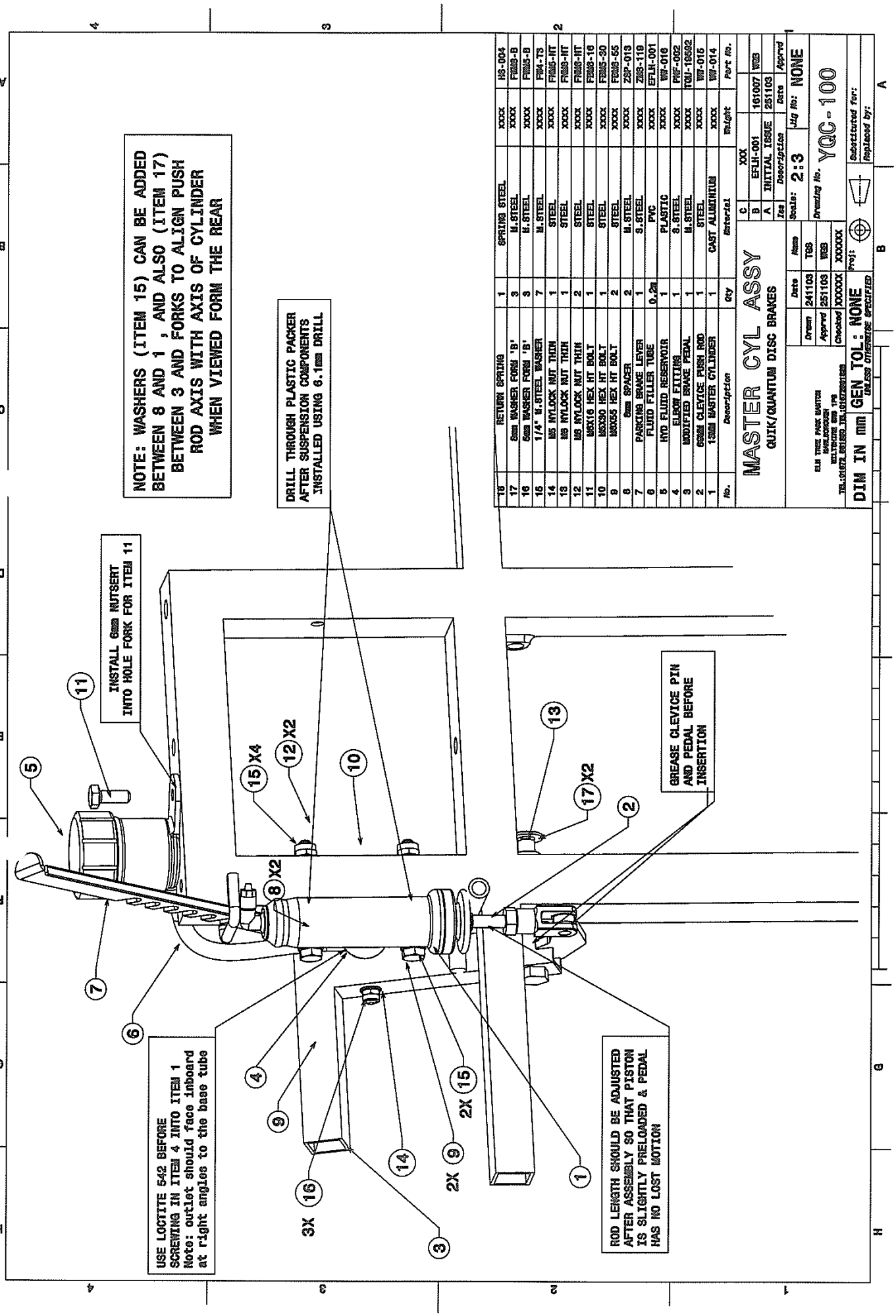
NOTE: WASHERS (ITEM 15) CAN BE ADDED BETWEEN 8 AND 1 , AND ALSO (ITEM 17) BETWEEN 3 AND FORKS TO ALIGN PUSH ROD AXIS WITH AXIS OF CYLINDER WHEN VIEWED FORM THE REAR
DRILL THROUGH PLASTIC PACKER AFTER SUSPENSION COMPONENTS INSTALLED USING 6.1mm DRILL
INSTALL 6mm NUTSERT INTO HOLE FORK FOR ITEM 11
GREASE CLEVICE PIN AND PEDAL BEFORE INSERTION
USE LOCTITE 542 BEFORE SCREWING IN ITEM 4 INTO ITEM 1 Note: outlet should face inboard at right angles to the base tube
ROD LENGTH SHOULD BE ADJUSTED AFTER ASSEMBLY SO THAT PISTON IS SLIGHTLY PRELOADED & PEDAL HAS NO LOST MOTION
MASTER CYL ASSY
QUIK/QUANTUM DISC BRAKES
DIM IN mm
GEN TOL: NONE
Scale: 2:3
Drawing No. YQC-100

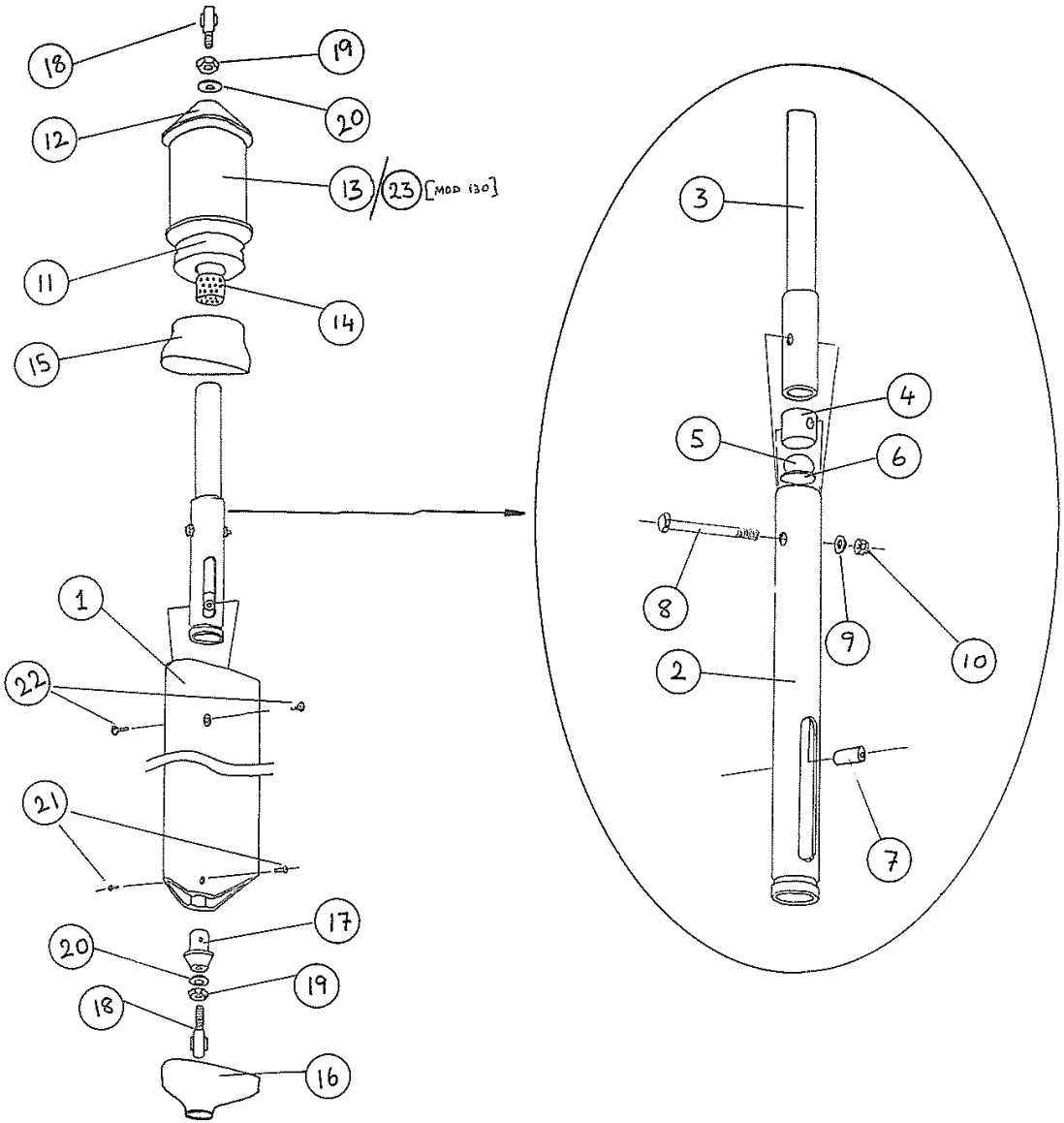

KEY CODE	DESCRIPTION	NUMBER OFF	DWG NO SW-	PART/FAST CODE
49				
48				
47				
46				
45				
44				
43				
42				
41				
40				
39				
38				
37				
36				
35				
34				
33				
32				
31				
30				
29				
28				
27				
26				
25				
24				
23	TAPERED REAR SUSPENSION RUBBER	2		ZMP-131
22	M5 X 10 COUNTERSUNK SCREW	4		FMS5-10
21	3/16 MONOBOLT	4		FR5-12-002
20	10mm M/STEEL WASHER	4		FWM10-B
19	10mm M/STEEL FULL NUT	4		FNM10-G8
18	ROD END BEARING	4		BEA-RE-2
17	REAR STRUT LOWER	2		ZKN-131
16	QUIK RUBBER END MOULDING	2		PMM-046
15	RUBBER END MOULDING	2		032-327
14	PM 1626 DX BEARING	2		BEA - DX2
13	REAR SUSPENSION RUBBER	2		ZMP-066
12	SPRING CUP UPPER	2		ZMA-059
11	SPRING CUP LOWER	2		ZMA-057
10	M6 NYLOCK 'T' TYPE	2		FNM6-NT
9	1/4 WASHER	2		FW4-T3
8	M6 X 40 HEX HT BOLT	2		FBM6-40
7	SIDE STRUT SLIDER BUSH	2		ZMA-165
6	6.1MM M/STEEL WASHER	2		FW4-12
5	RUBBER BALL	2		032-310
4	QUIK SIDE STRUT SLIDER	2		ZMP-130
3	SUSPENSION GUIDE TUBE	2		ZMS-319
2	AIRFOIL STRUT SUSPENSION TUBE	2		ZMA-164
1	QUIK REAR AIRFOIL STRUT	2		YQC-209

SOLAR WINGS AVIATION Ltd
Elm Tree Park
Manton, Marlborough
Wiltshire SN8 4BY
TEL : 0672 861578

	Date	Name
Drawn	050503	TGS
Approved	6/5/03	
Checked	6/5/3	

SUB-ASSEMBLY | AIRFOIL STRUT ASSEMBLY

B	MOD 130	22/11/04	
A	INITIAL ISSUE	050503	

Drawing No.
YQC-101

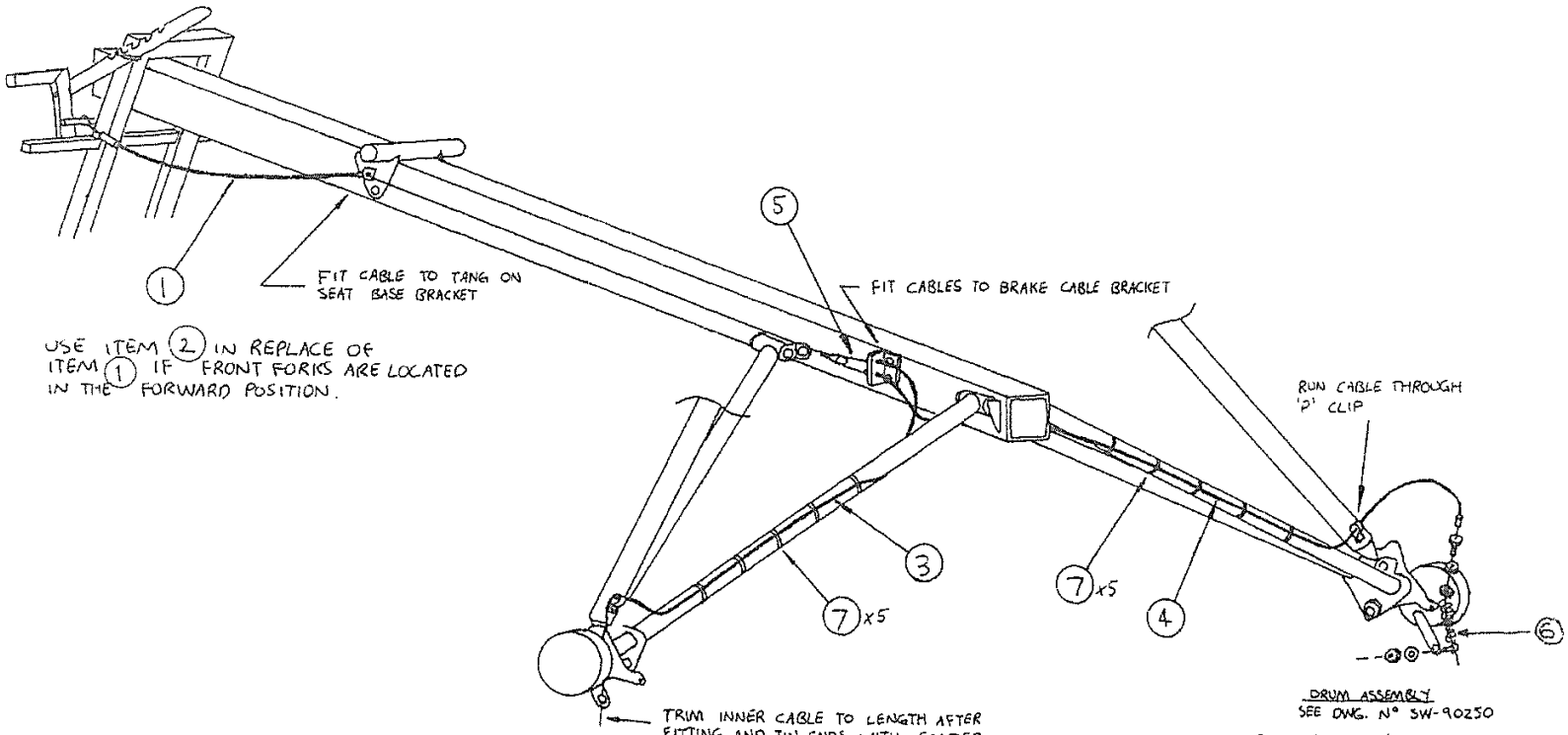

DRUM ASSEMBLY
SEE DWG. N° SW-90250

IF AN ASSEMBLY/COMPONENT IS NOT COMMON TO ALL QUANTUMS, THEN THE RELEVANT ITEM NUMBER IS IDENTIFIED ON THIS DRAWING WITH AN (*) SUFFIX.

KEY CODE	DESCRIPTION	NUMBER OFF	DWG NO SW-	PART/FAST CODE
8	SPARE			
7	LONG WHITE CABLE TIE 4.6x280mm	10	N/A	HTW-004
6	SPRING	2		HS-012
5	BRAKE CABLE INNER - REAR	1		YQC-133
4	BRAKE CABLE OUTER - RIGHT REAR	1		YQC-132
3	BRAKE CABLE OUTER - LEFT REAR	1		YQC-131
2	BRAKE CABLE - FRONT SECTION (LONG)	1		YQC-135
1	BRAKE CABLE - FRONT SECTION (SHORT)	1		YQC-134

PEGASUS QUIK

SOLAR WINGS AVIATION Ltd
Elm Tree Park
Manton, Marlborough
Wiltshire SN8 1PS, UK.
Tel: 0672 861578

	Date	Name
Drawn	210802	TGS
Approved	21/8/02	
Checked	21/8/02	

SUB-ASSEMBLY | BRAKE SYSTEM

Iss.	Description of revision	Date	Approved
A	INITIAL ISSUE	210802	

Drawing No. YQC-130

NUMBER	DESCRIPTION/MATERIAL	QTY	PART NO/
20	NYLON SET SCREW (BLACK)	1	FMS6-18
21	PLASTIC WASHER	1	FWP-004
22	M.STEEL SPACER	1	ZSP-031
23	NYLON M6 NUT	1	FPN6-10
24	STEEL WASHER M5 HOLE	1	FW3-12
25	CAP HEAD SET SCREW M5x16	1	FCM5-16
26	WIRE LAN YARD	1	RLY-003
27	M5 NYLOCK NUT	1	FNM5-NT
28			

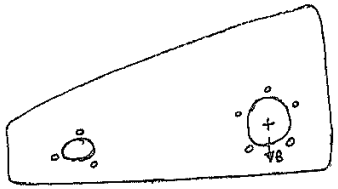

TOP VIEW OF REAR CHSIDE OF FUEL TANK

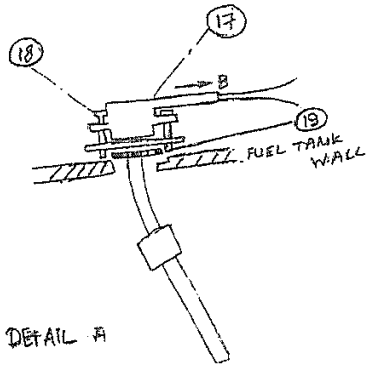

DETAIL A

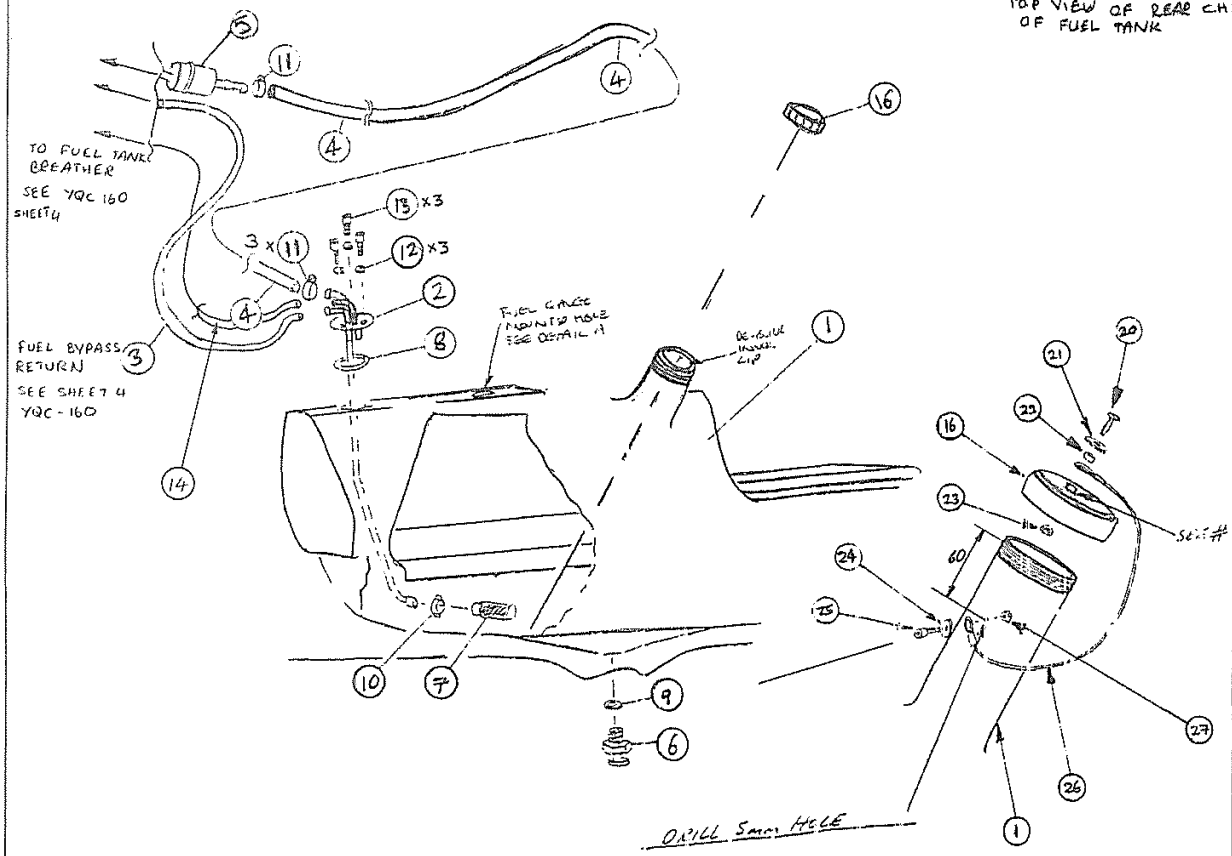

Number	DESCRIPTION / MATERIAL	DRW NO	Quantity	PART NO/ MAT CODE
19	'O' RING		1	EFTC-18
18	SOCKET CAP SCREW M5 (13mm)		5	FCM5-13
17	LTS ELECTRONIC FUEL GAUGE		1	EFG-5
16	BLACK FUEL TANK CAP		1	EFTC-17
15			1	
14	245 FUEL HOSE HYDRO K30		1	EFLH-2
13	M6 X 10mm SOCKET HEAD CAP SCREW		3	FCM6-10
12	6mm S.COIL SQ SEC SPRING WASHER		3	FWM6-SW
11	12mm HOSE CLIP		4	HCM12-001
10	1/2" "O" CLIP		1	HCI8-001
9	3/4" OD X 1/4" BSP FIBRE WASHER		1	EFW-1
8	30.4 X 3.5mm NITRILE "O" RING		1	EFTC-8
7	FUEL TANK STRAINER (FORD TYPE)		1	EFF-5
6	DRAIN PLUG (CAV 180.)		1	EFTC-5
5	INLINE FUEL FILTER (STRAIGHT)		1	EFF-1
4	245 FUEL HOSE HYDRO K30		0.31m	EFLH-2
3	245 FUEL HOSE HYDRO K30		1.01m	EFLH-2
2	FUEL TANK PICK UP PIPE	90534	1	YQC-142
1	FUEL TANK	89218	1	EFT-4

G			
F			
E			
D			
C			
B			
A	INITIAL ISSUE	111102	
Iss.	Description of revision	Date	Approved

	Date	Name
Drawn	091102	TGS
Checked	111102	

SUB-ASSEMBLY
912 FUEL SYSTEM

DIM. IN mm | SCALE: | PROJ.
GEN. TOL. +-:

PEGASUS AVIATION Ltd

Drawing No.
YQC-140

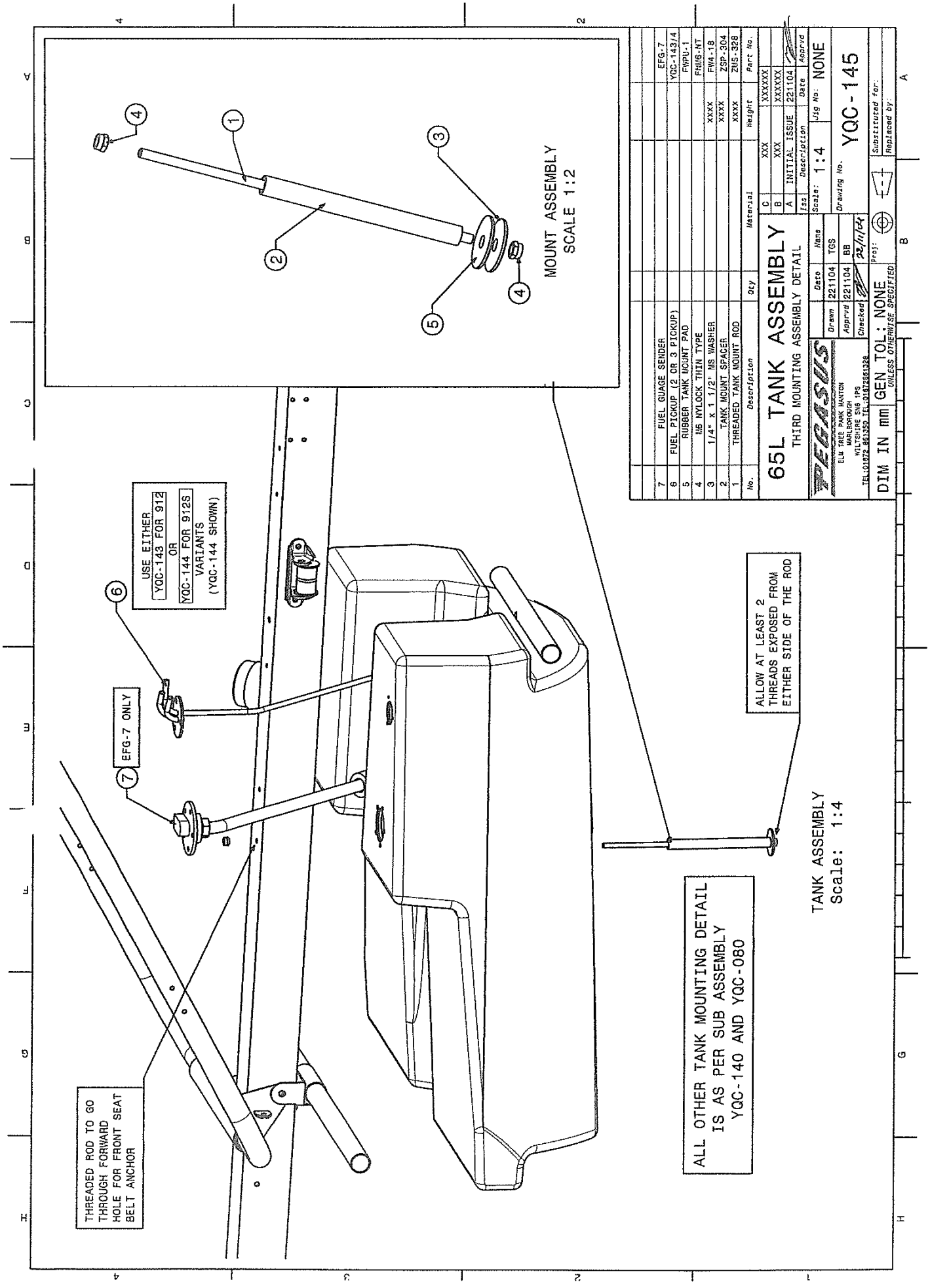
MOUNT ASSEMBLY
SCALE 1:2
USE EITHER
YQC-143 FOR 912
OR
YQC-144 FOR 912S
VARIANTS
(YQC-144 SHOWN)
EFG-7 ONLY
ALLOW AT LEAST 2
THREADS EXPOSED FROM
EITHER SIDE OF THE ROD
THREADED ROD TO GO
THROUGH FORWARD
HOLE FOR FRONT SEAT
BELT ANCHOR
ALL OTHER TANK MOUNTING DETAIL
IS AS PER SUB ASSEMBLY
YQC-140 AND YQC-080
TANK ASSEMBLY
Scale: 1:4
7 FUEL GUAGE SENDER EFG-7
6 FUEL PICKUP (2 OR 3 PICKUP) YQC-143/4
5 RUBBER TANK MOUNT PAD FWPU-1
4 M6 NYLOCK THIN TYPE FNW6-NT
3 1/4" x 1 1/2" MS WASHER XXXX FW4-18
2 TANK MOUNT SPACER XXXX ZSP-304
1 THREADED TANK MOUNT ROD XXXX ZMS-328
No. Description Qty Material Weight Part No.
65L TANK ASSEMBLY
THIRD MOUNTING ASSEMBLY DETAIL
C XXX XXXXXX
B XXX XXXXXX
A INITIAL ISSUE 221104
Iss Description Date Apprvd
PEGASUS
ELM TREE PARK MANTON
MARLBOROUGH
WILTSHIRE SN8 1PS
TEL:01672 861359 FAX:01672861328
Drawn Date 221104 Name TGS
Apprvd 221104 BB
Checked
Proj:
Scale: 1:4
Jig No: NONE
Drawing No. YQC-145
DIM IN mm GEN TOL: NONE
UNLESS OTHERWISE SPECIFIED
Substituted for:
Replaced by:

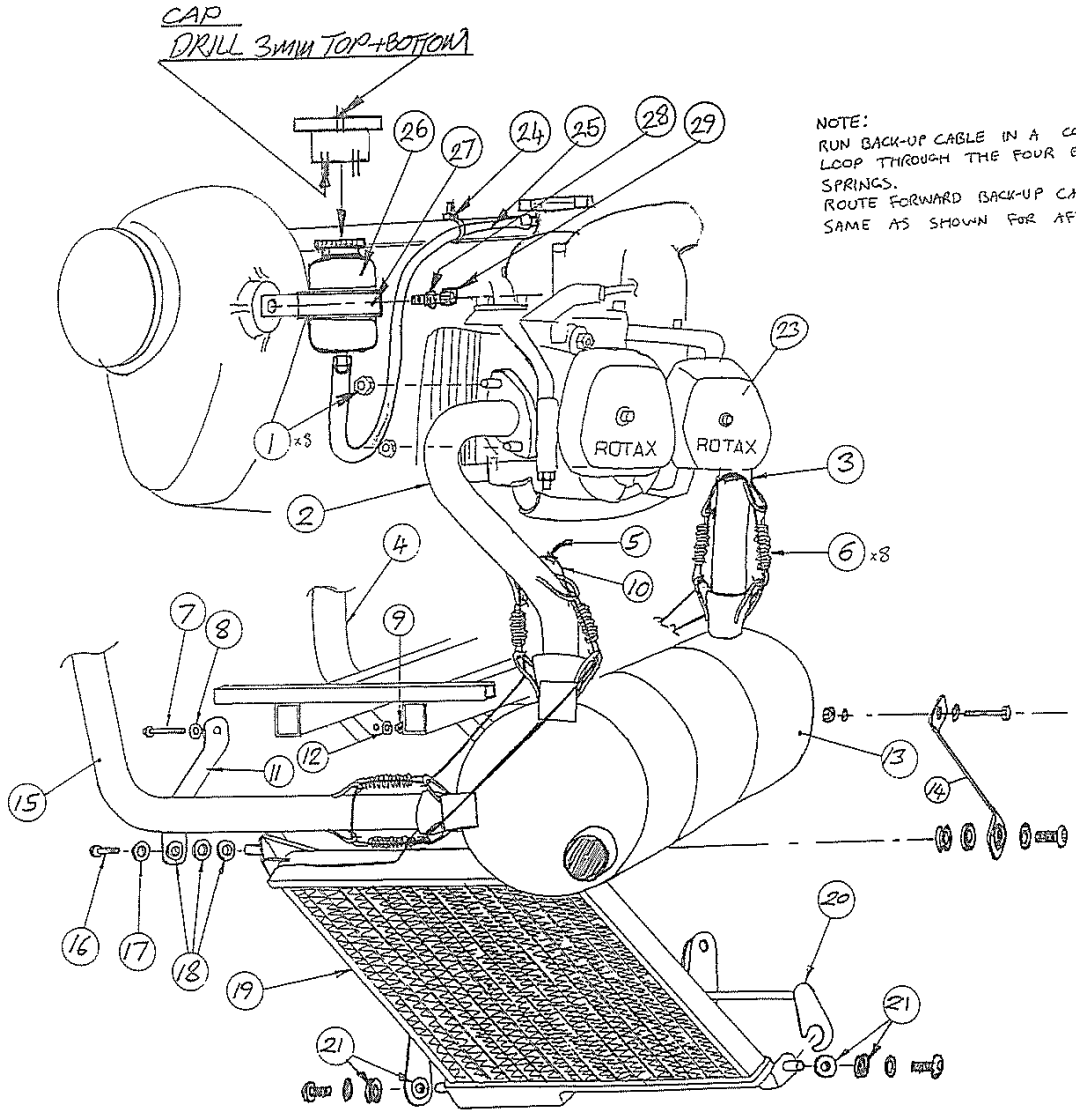

ITEM	DESCRIPTION	QTY	PART NO
29	M10 x 20 SKT SCREW	1	FCM10-20
28	M10 SPRING WASHER	1	005-830
27	STRAP	1	ZMS335
26	EXPANSION BOTTLE	1	030940
25	OVERFLOW TUBE	0.5M	EFLH-3
24	CABLE TIE	1	HTW-002
23	ENGINE	1	PP912/1
21	GROMMET		PMM-008
20	BOTTOM RADIATOR BRACKET	1	ZMS-185
19	METRO RADIATOR	1	ELR-002
18	GROMMET	8	PMM-008
17	M8 SKIFFY WASHER	2	PMC-S88
16	M8 DOMED SOCKET BOLT	2	FMS8-15
15	PORT REAR EXH PIPE	1	TQU-20300
14	RADIATOR BRACKET RH	1	ZMS-260
13	ROTAX 912 SILENCER	1	WITH ENGINE
12	M5 T3LP WASHER		FWM5-B
11	RADIATOR BRACKET LH	1	ZMS-259
10	BACKUP CABLE	A/R	RW1.5-SSC
9	M5 NYLOC NUT	2	FNM5-NP
8	M5 T3LP WASHER	4	FWM5-B
7	M5 x 30 HEX BOLT	2	FBM5-30
6	EXHAUST SPRING	8	938 795
5	FERRULE	2	RF2-CCU
4	PORT FRONT EXH. PIPE	1	TQU-20310
3	STBD FRONT EXH. PIPE	1	TQU-20330
2	STBD REAR EXHAUST PIPE	1	TQU-20320
1	M8 STIFF NUT	8	WITH ENGINE

Iss.	Description of revision	Date	Approved
D	M1168 overflow	13/3/06	WGB
C	oil hose routing	30/9/04	TGS
B	E. MOUNT SPACING	170403	WGB
A	INITIAL ISSUE	151102	TGS

	Date	Name
Drawn	151102	TGS
Checked	13/3/06	WGB

DIM. IN mm | SCALE: NTS
GEN. TOL. +-: 0.5
PROJ:

SUB-ASSEMBLY

POWERPLANT SUB ASSEMBLY

912 S (FUEL AND MIXTURE CONTROL SYSTEM)

PEGASUS AVIATION

Drawing No. YQC-160

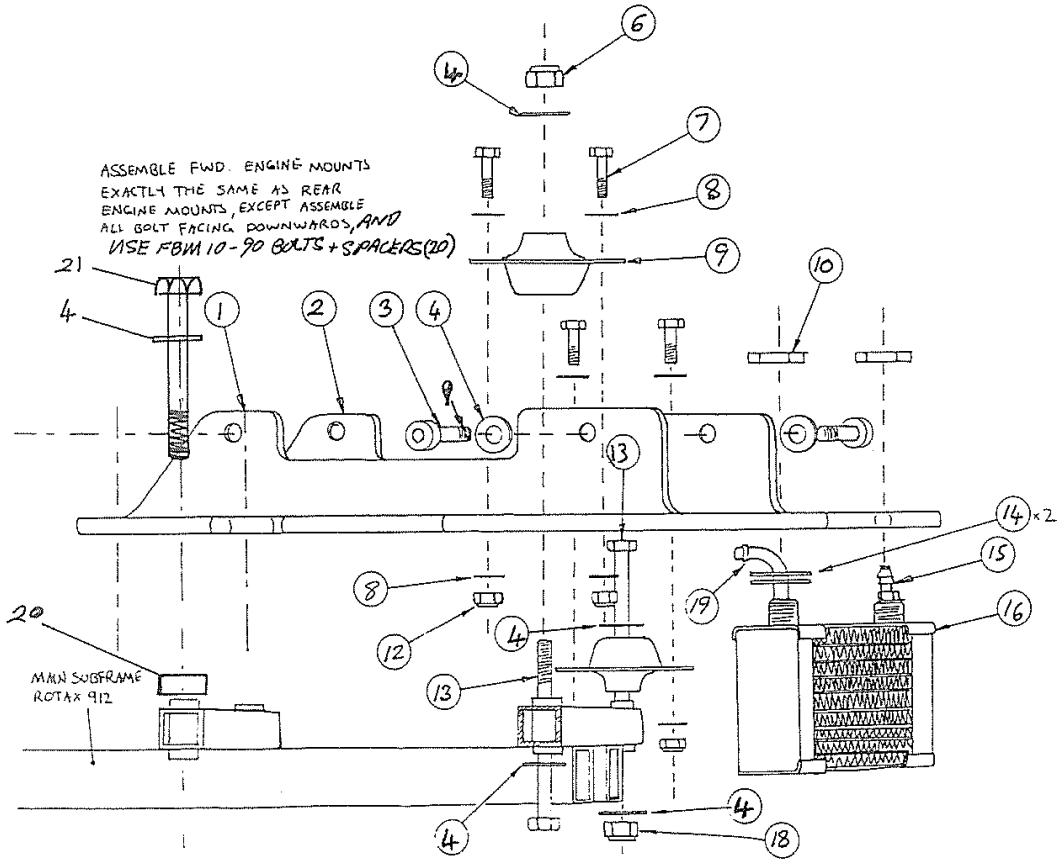

ITEM	DESCRIPTION	QTY	PART NO
21	10mm x90 BOLT	2	FBM10-90
20	10mm SPACER	2	032-315
19	OIL COOLER 90DEG CONN	WITH OIL	COOLER
18	M10 T TYPE NYLOC NUT		FNM10-NT
16	OIL COOLER		WITH ENGINE
15	OIL COOLER NIPPLE		WITH ENGINE
14	M22 X 1.5mm WASHERS	3	FWM24-B
13	M10 X 80 HEX BOLT	2	FBM10-80
12	M8 T TYPE NYLOC NUT	8	FNM8-NT
10	M22 THIN NUT (WITH OIL COOLER)		
9	METALASTIK MOUNT	4	100640
8	M8 WASHER	16	FWM8-B
7	M8 X 20 HEX BOLT	8	FBM8-20
6	M10 T TYPE NYLOK NUT	4	FNM10-NT
4	M10 WASHER	20	FWM10-B
3	M10 X 35 CAP HEAD BOLT	4	FBM10-35
2	ENGINE MOUNT ANGLE RH	1	ZPL-022
1	ENGINE MOUNT ANGLE LH	1	ZPL-023

SHEET 2 OF 8

Iss.	Description of revision	Date	Approved
C	FEED BIL HOSE RE-ROUTE	300904	
B	E. MOUNT SPACING	170403	LWH
A	INITIAL ISSUE	151102	TGS

	Date	Name
Drawn	151102	TGS
Checked	151102	

DIM. IN mm | SCALE: NTS | PROJ:
GEN. TOL. +-: 0.5

SUB-ASSEMBLY

POWERPLANT SUB ASSEMBLY

912 S (OIL COOLER AND CHANEL MOUNTS)

PEGASUS AVIATION

Drawing No. YQC-160

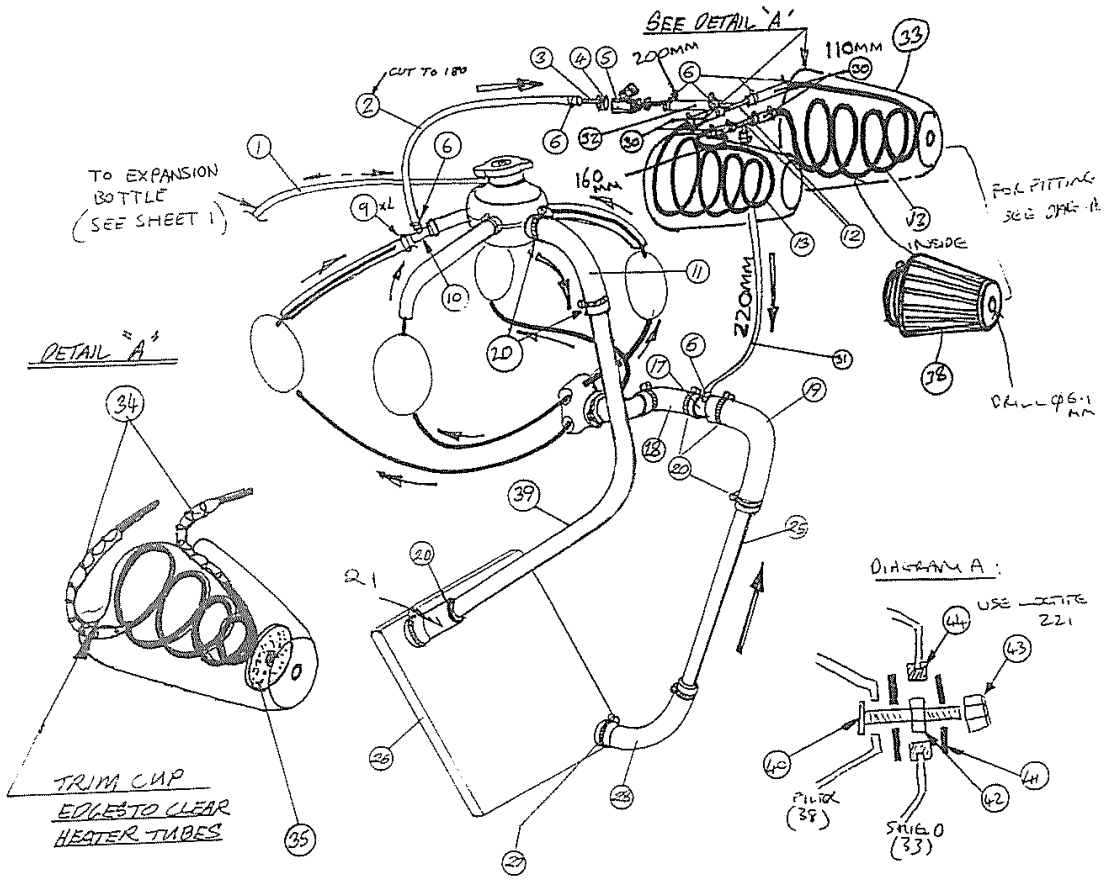

Number	DESCRIPTION / MATERIAL	Quantity	PART NO/ MAT CODE
44	Grommet	2	PMM-008
43	M6 T Type nut	2	FNM6-NT
42	M6 Plain Nut	2	FNM6-GB
41	Washer	4	FW4-12
40	Big Head Fastner cut to 21.5mm	2	FMSB-001
39	Radiator Header Pipe	1	ZMA-082
38	K+N Air Filter+Clip	2	TQB-90523
35	Neoprene Pad	2	PPCH-005
34	Spiral Wrap Sleeve	1m	HSW-001
33	Intake Draught Shield	2	PPCH-004
32	Rubber Fuel Hose cut to 100	1	EFLH-002
31	Rubber Fuel Hose cut to 300	1	EFLH-002
30	Rubber Fuel Hose cut to 220	4	EFLH-002
29	Rubber Hose sleeve 50mm	1	
28	see page 8	1/2	ELH-002
27	Hose Clamp 30/40mm	2	HCJ-002
26	Radiator (modified)	see sheet1	
25	Radiator Hose	1	ZMA-073
21	see page 8	1/2	ELH-002
20	Hose Clamp 25/35mm	9	HCJ-004
19	see page 8	1/2	ELH-002
18	see page 8	1/2	ELH-002
17	Carb Heat Inlet Tapping	1	PPCH-003
15			
13	Heat Exchanger coil	2	PPCH-002
12	Tee Piece, Steel	2	EFLC-008
11	~~See Page 8~~ See page 5	1	ELH-002
10	Carb Heat Outlet Tapping	1	PPCH-001
9	Hosw clamp, 16/25mm	2	HCJ-004
8			
7			
6	Hose Clamp	14	HCM12-001
5	In Line Fuel Tap	1	EFLC-7
4	see 5		
3	see 5		
2	Rubber Fuel Hose 150°C max	2m	EFLH-002
1	Expansion Tube	1m	PTM4-001

Iss.	Description of revision	Date	Approved
C	FEED OIL HOSE RE-ROUTE	300904	
B	E. MOUNT SPACING	170403	
A	INITIAL ISSUE	151102	TGS

	Date	Name
Drawn	151102	TGS
Checked	151102	

DIM. IN mm | SCALE: NTS | PROJ:
GEN. TOL. +-: 0.5

SHEET 3 OF 8

SUB-ASSEMBLY

POWERPLANT SUB ASSEMBLY

912 S (COOLING SYS AND CARB HEATERS)

PEGASUS AVIATION

Drawing No. YQC-160

MIXTURE CONTROL QTM/QUIK 912 (S) – MODIFICATION OF RIGHT HAND CARBURATOR

1. REMOVE DIAPHRAGM COVER, DIAPHRAGM, SLIDER, FLOAT BOWL AND FLOATS
2. MARK OFF CENTRE OF COUNTERBORED HOLE ON SURFACE AS SHOWN TO DIMENTIONS
3. THROUGH DRILL 3.0 TO VENTURI (TAKE CARE NOT TO STRIKE NEEDLE JET WITH DRILL TIP)
4. COUNTER BORE 5.0 TO DEPTH 10mm
5. TAP M6 X 1.0 THREAD TO DEPTH 10mm
6. DEBURR AND CLEAR ANY SWARF FROM DRILLING AND TAPPING
7. RE ASSEMBLE CARB
8. SCREW ZMS-285 (M6 NIPPLE) INTO TAPPED HOLE WITH LOCTITE 221 TO RETAIN FITTING

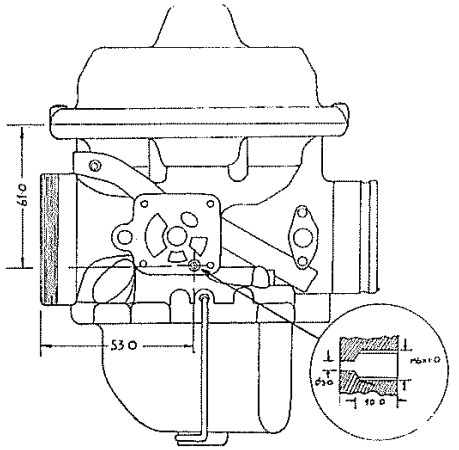

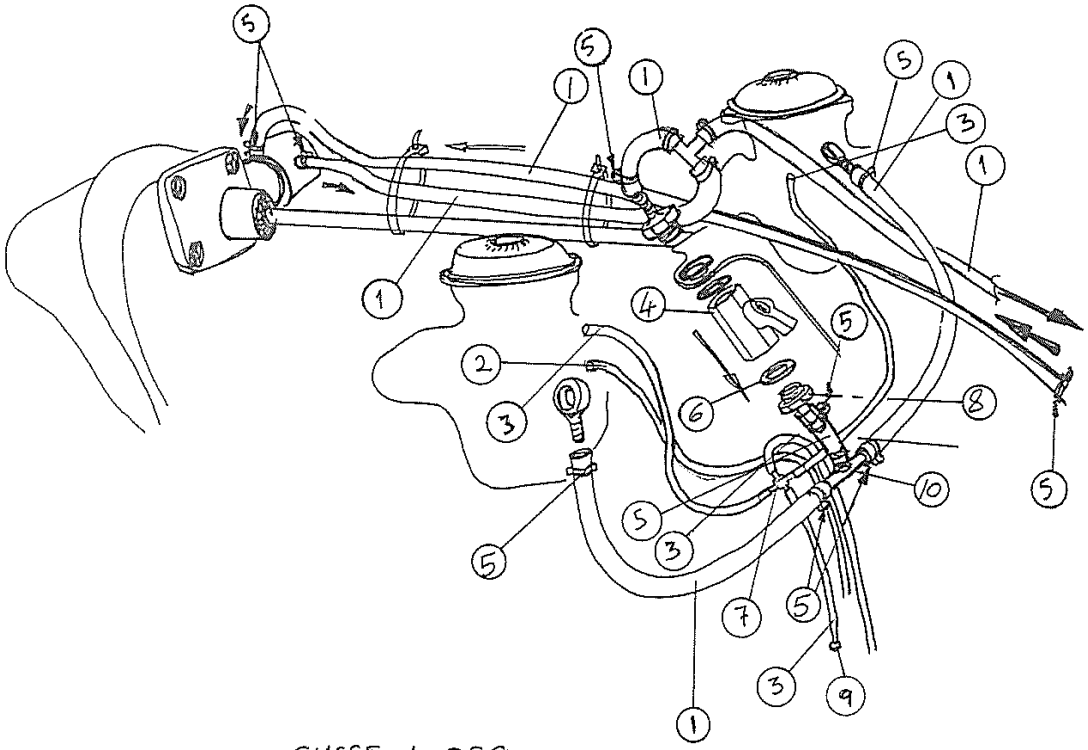

13	M6 NIPPLE	1	ZMS-285
12	260MM WHITE TY WRAPS	5	HTW-003
11	100MM BLACK TY WRAPS	10	HTW-002
10	STEEL 'T' PIECE	2	EFLC-8
9	RESTRICTOR JET FROM MIXTURE CONTROL KIT	1	–
8	1/4" BSP SPIGOT	2	EFLC-2
7	CROSS UNION FROM MIXTURE CONTROL KIT	1	–
6	FIBRE WASHER	3	HTW-001
5	HOSE CLAMP	12	HCM12-001
4	FUEL TAP	1	EFLC-3
3	CARBURATOR VENT TUBE		PT12-001
2	STATIC SOURCE TUBE		EFLH-007
1	FUEL HOSE		EFLH-002

SHEET 4 OF 8

C	FEED O/L HOSE RE-ROUTE	300904	
B	E. MOUNT SPACING	170403	
A	INITIAL ISSUE	151102	TGS
Iss.	Description of revision	Date	Approved

	Date	Name
Drawn	151102	TGS
Checked		

DIM. IN mm | SCALE: NTS | PROJ:
GEN. TOL. +-: 0.5

SUB-ASSEMBLY

POWERPLANT SUB ASSEMBLY

912 S (FUEL AND MIXTURE CONTROL SYSTEM)

PEGASUS AVIATION

Drawing No. YQC-160

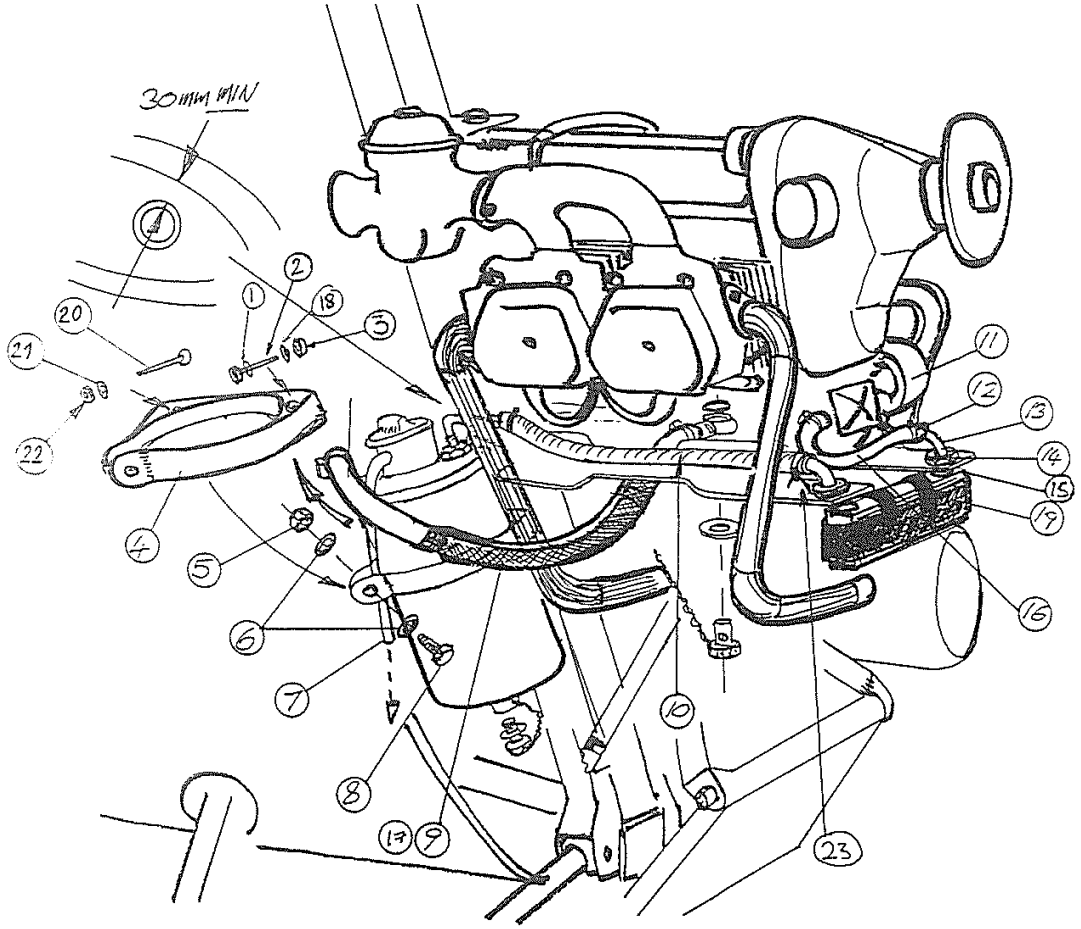

Number	DESCRIPTION / MATERIAL	Quantity	PART NO/ MAT CODE
23	WIRE LOCKING		
22	M6 NYLOCK NUT T TYPE	1	FNM6-NT
21	1/4" T4LP WASHER	1	FW4-T4
20	M6*35mm C/SUNK SKT CAP	1	FMS6-35
19	OIL RADIATOR COVER	1	RAD-001
18	M5 FORM B WASHER	1	FWM5-B
17	FIRE SLEEVE	300mm	ELH-004
16	INLET HOSE	550mm	858390
15	OIL COOLER		886025
14	THIN NUT OIL COOLER		886025
13	OIL COOLER ELBOW	2	924218
12	HOSE CLAMP 25/35mm	2	HCJ-002
11	OIL FILTER		825701
10	FEED HOSE	400mm	958390
9	RETURN HOSE	540mm	958390
8	8mm HEX BOLT	1	FBM8-30
7	OIL BREATHER TUBE	0.3M	EFLH-7
6	8mm WASHER	2	FWM8-B
5	M8 P TYPE NYLOCK NUT	1	FNM8-NP
4	OIL BOTTLE CLAMP	1	TQB-15275
3	ME P TYPE NYLOCK NUT	1	FNM5-NP
2	M5X35 HEX BOLT	1	FBM5-35
1	WASHER	1	FW3-12

SHEET 5 OF 8

Iss.	Description of revision	Date	Approved
C	FEED OIL HOSE RE-ROUTE + WIRE LOCK	300904	
B	E. MOUNT SPACING	170403	
A	INITIAL ISSUE	151102	TGS

	Date	Name
Drawn	151102	
Checked	151102	

DIM. IN mm | SCALE: NTS | PROJ: 30
GEN. TOL. +-: 0.5

PEGASUS AVIATION

Drawing No. YQC-160

SUB-ASSEMBLY

POWERPLANT SUB ASSEMBLY

912 S

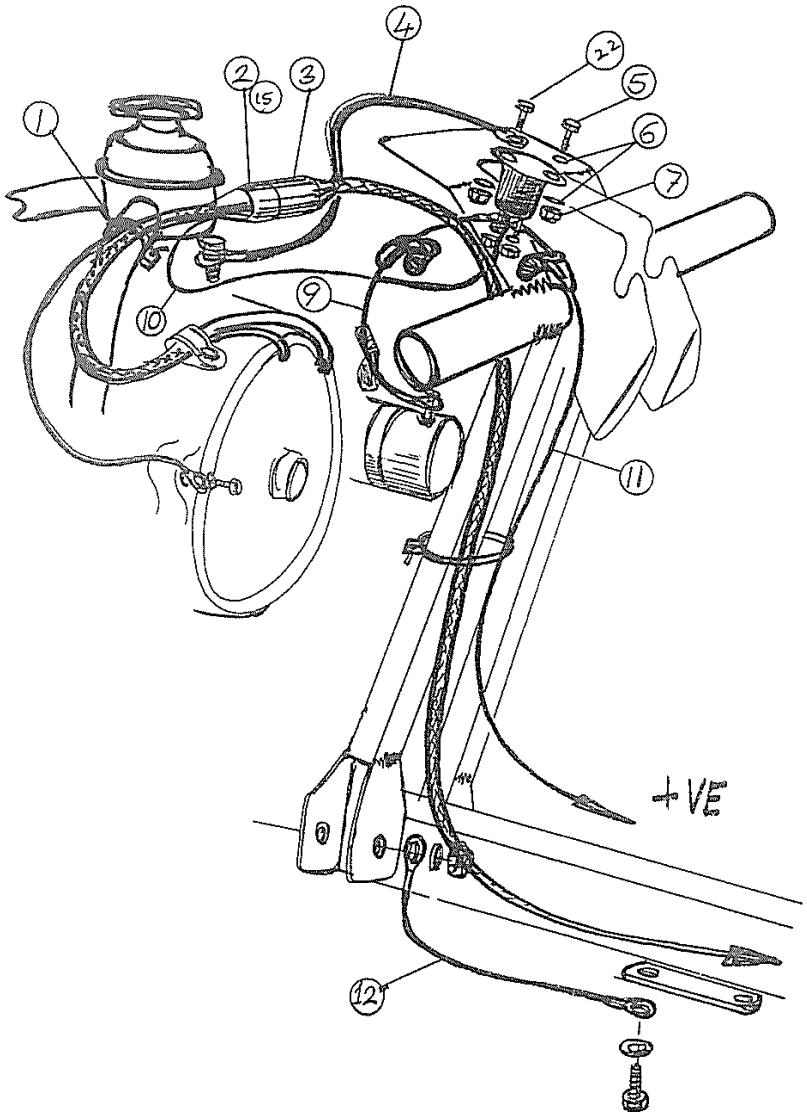

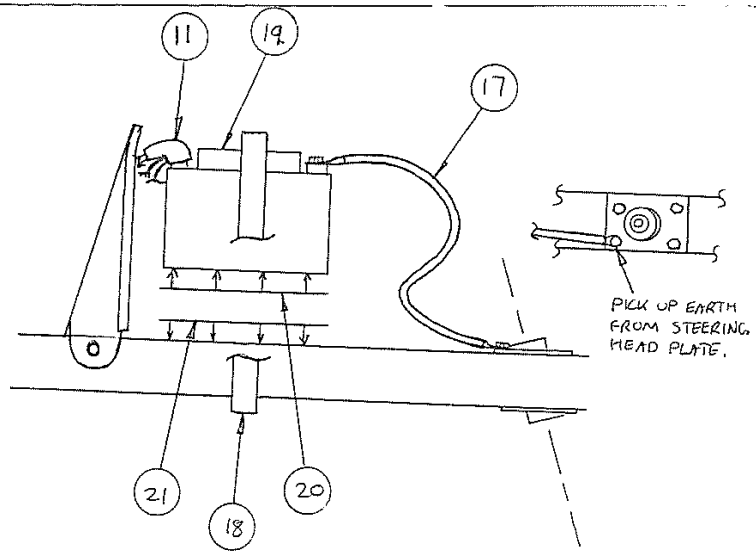

ITEM	DESCRIPTION	QTY	PART NO
22	6mm Hex Bolt	1	FBM6-20
21	VELCRO 50mm HOOK	150mm	VW50-044
20	VELCRO 50mm LOOP	150mm	VW50-004
19	BATTERY	1	LB-004
18	BATTERY STRAP	1	TQB-18150
17	EARTH CABLE	1	LC-029
15	CRIMP CONTACTS	10	LT-012
12	EARTH STRAP	1	LC-030
11	SOLENOID POWER CABLE	1	LC-050
10	SOLENOID LEAD	1	LC-012
9	STARTER MOTOR CABLE	1	LC-031
7	6mm NYLOC NUT	2	FNM6-NT
6	6mm WASHER	4	FW4-T3
5	6mm HEX BOLT	1	FBM6-16
4	EARTH STRAP	1	LC-032
3	LOOM	1	TQU-16534
2	CONNECTOR PLUG	1	LT-008
1	CABLE TIE	5	HTW-002

SHEET 6 OF 8

Iss.	Description of revision	Date	Approved
C	FEED OIL HOSE RE-ROUTE	300904	
B	E. MOUNT SPACING	170403	
A	INITIAL ISSUE	151102	TGS

DIM. IN mm | SCALE: NTS
GEN. TOL. +-: 0.5
PROJ:

	Date	Name
Drawn	151102	TGS
Checked	151102	

PEGASUS AVIATION

Drawing No. YQC-160

SUB-ASSEMBLY

POWERPLANT SUB ASSEMBLY

912 S (BATTERY AND ELECTRICS)

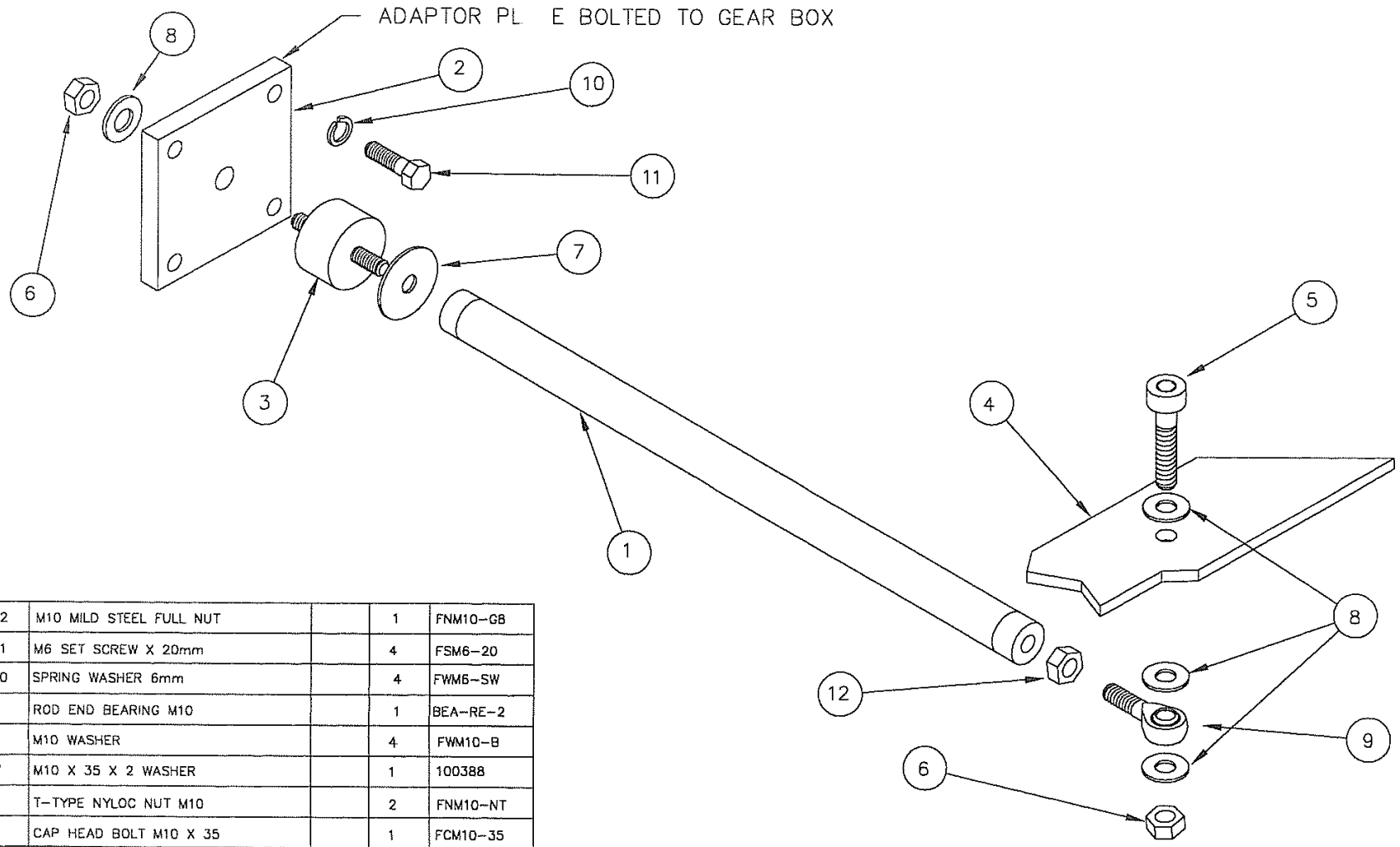

Number	DESCRIPTION / MATERIAL	DRW.NO.	Quantity	PART NO/ MAT CODE
12	M10 MILD STEEL FULL NUT		1	FNM10-G8
11	M6 SET SCREW X 20mm		4	FSM6-20
10	SPRING WASHER 6mm		4	FWM6-SW
9	ROD END BEARING M10		1	BEA-RE-2
8	M10 WASHER		4	FWM10-B
7	M10 X 35 X 2 WASHER		1	100388
6	T-TYPE NYLOC NUT M10		2	FNM10-NT
5	CAP HEAD BOLT M10 X 35		1	FCM10-35
4	MAIN SUB FRAME (PART OF)			ZMS-253
3	RUBBER MOUNT		1	EVI-007
2	912 THRUST LINK ADAPTOR PLATE	90499	1	ZMS-262
1	ENGINE THRUST LINK 912	90492	1	ZMS-258

NOTE: USE A MILD THREAD LOCK ON ALL THREADS NOT FIXED WITH NYLOC NUTS

SHEET 7 OF 8

Iss.	Description of revision	Date	Approved
C	FEED OIL HOSE RE-ROUTE	300904	
B	E. MOUNT SPACING	170403	TGS
A	INITIAL ISSUE	151102	TGS

	Date	Name
Drawn	220296	S.TUDDENHAM
Checked	20/10/2008	

DIM. IN mm | SCALE: NTS | PROJ:
GEN. TOL. +-: 0.5

PEGASUS AVIATION

Drawing No. YQC-160

SUB-ASSEMBLY ENGINE THRUST LINK

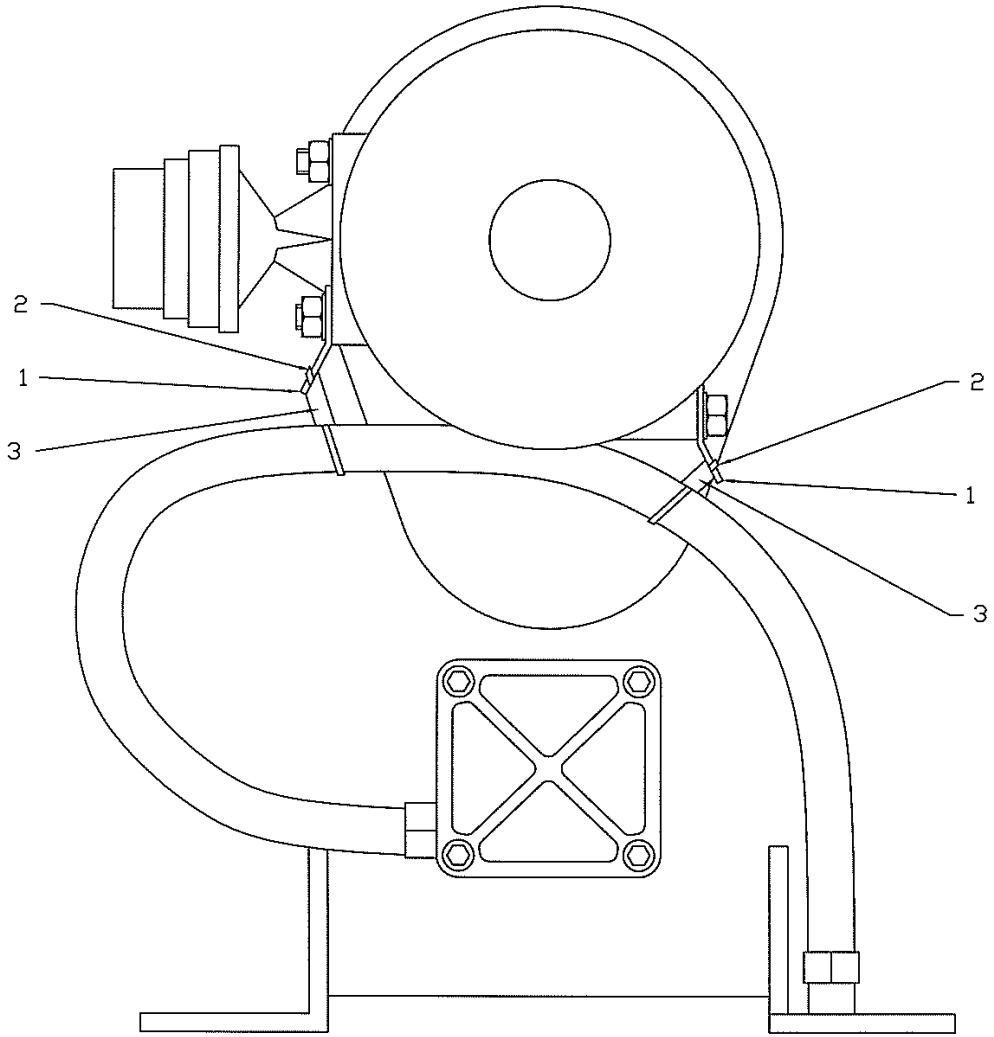

Rear View Of Engine

Not To Scale
Some Detail Omitted For Clarity

Sheet 10 of 10

No.	Description	Qty	Material	Part No.
3	Fuel Hose	As Req	N/A	024-010
2	Cable Tie Black	2	Plastic	HTW-004
1	Tang SS2004	2	Stainless	RT-185

Oil Hose To Gearbox Attachment

Iss	Description	Date	Apprvd
C			
B			
A			

	Date	Name
Drawn	9/1/06	
Checked	13/1/06	

Scale: 1:1
Dwg No: NONE
Drawing No. YQC-160

DIM IN mm
GEN TOL: 0.1mm UNLESS OTHERWISE SPECIFIED
Proj:
Substituted for:
Replaced by:

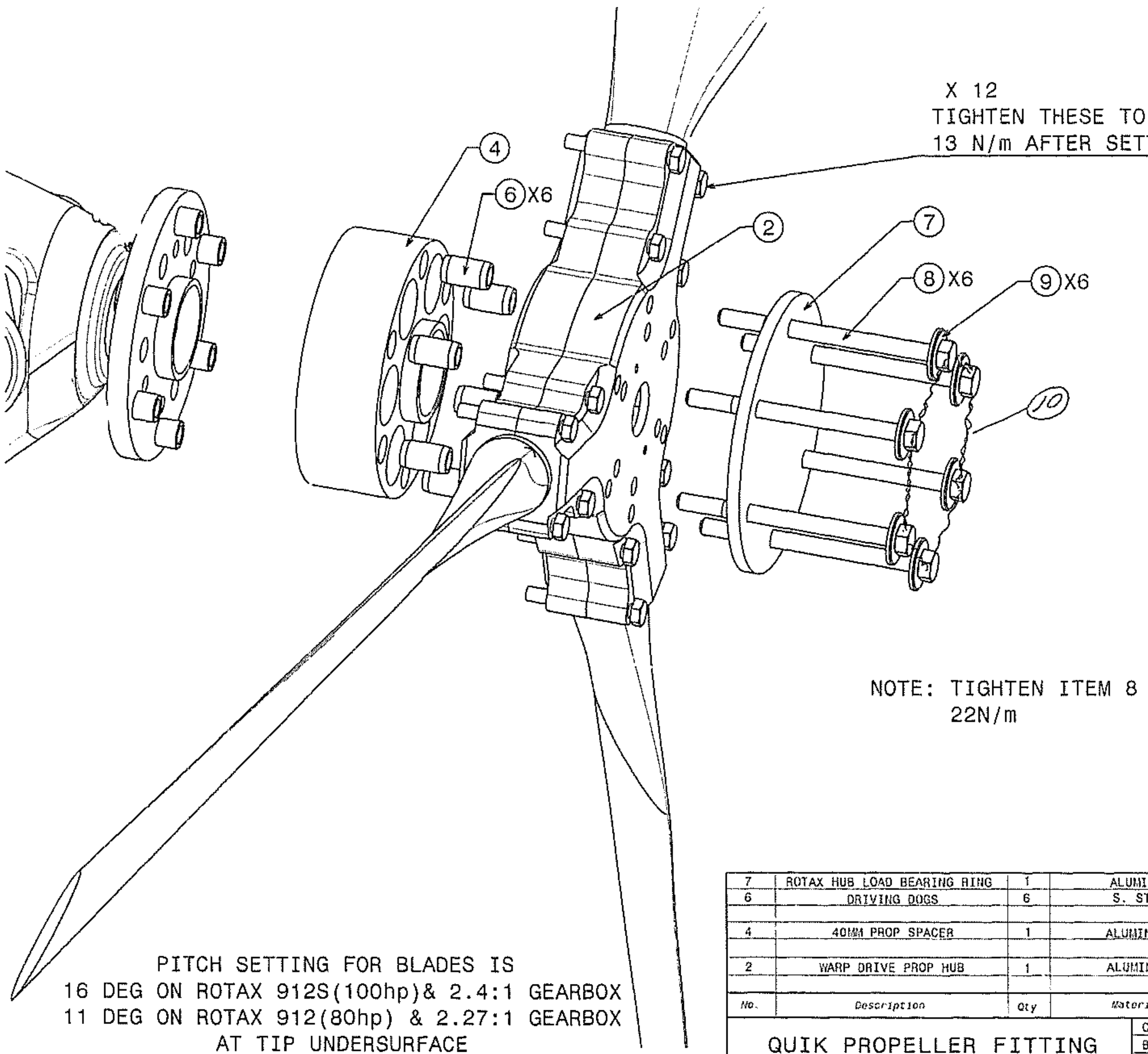

No.	Description	Qty	Material	Weight	Part No.
					FNM8-HT
10	RW-SW WIRELOCK				
9	M8 STEEL BELLVILLE WASHER	6	STEEL		FWM8-BEL
8	M8 X 105 HEX HEAD HT BOLT	6	STEEL(10.9)		FBM8-105
7	ROTAX HUB LOAD BEARING RING	1	ALUMINIUM		
6	DRIVING DOGS	6	S. STEEL		YQC-182
4	40MM PROP SPACER	1	ALUMINIUM		YQC-181
				xxxx	
2	WARP DRIVE PROP HUB	1	ALUMINIUM	xxxx	xxxx
				xxxx	

QUIK PROPELLER FITTING

66" PARALLEL CHORD 3 BLADED WARP DRIVE

Iss	Description	Date	Apprvd
C	XXX	XXXXXX	
B	XXX	XXXXXX	
A	INITIAL ISSUE	210802	[signature]

PEGASUS
ELM TREE PARK MANTON
MARLBOROUGH
WILTSHIRE SN8 1PS
TEL:01672 861350 TEL:01672861328

	Date	Name
Drawn	180802	[signature]
Apprvd	210802	[signature]
Checked	210802	TGS

Scale: 1:2 Jig No: NONE

Drawing No. YQC-180

DIM IN mm GEN TOL: NONE UNLESS OTHERWISE SPECIFIED

Proj:

Substituted for:
Replaced by:

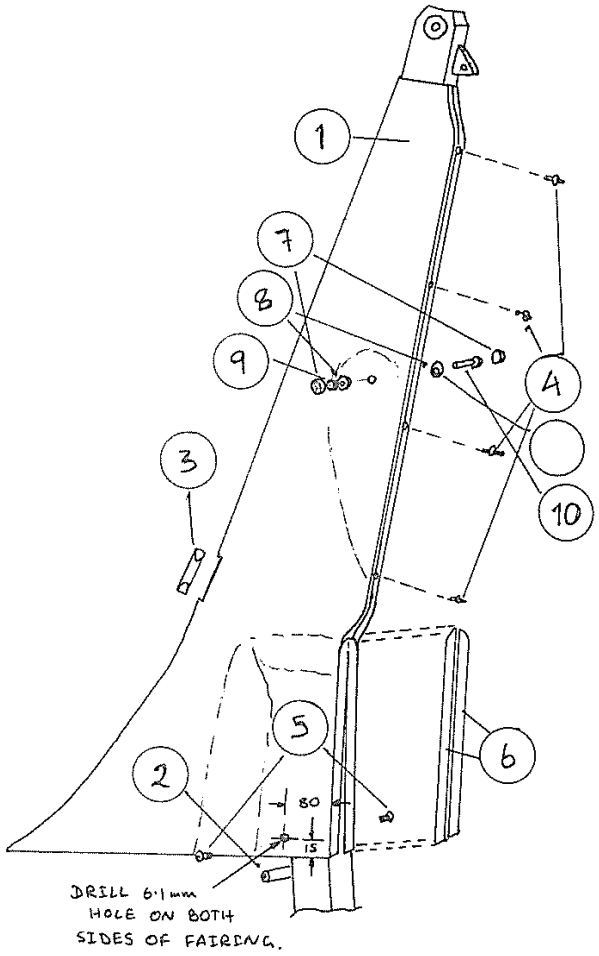

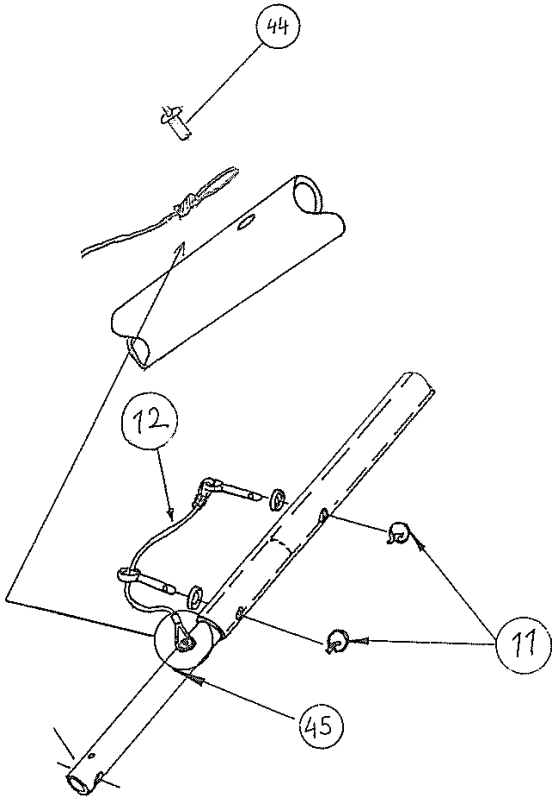

KEY CODE	DESCRIPTION	NUMBER OFF	DWG NO SW-	PART/FAST CODE
49				
48				
47	5mm S.COIL SPRING WASHER			FWM5-SW
46	12mm M/S FORM 'C' WASHER	2		FWM12-C
45	FRONT STRUT LOWER COMPLETE	1		TQU-12200
44	3/16 x 3/8 MONEL POP RIVET	1		FR6-12-001
43	M5 FORM 'B' WASHER	2		FWM5-B
42	TOURING SCREEN EXTENSION	1		YQC-204/Ex
41	PLASTIC SPAT BUSH	2		ZMP-072
40	3/16 STEEL WASHER	2		FW3-12
39	M6 CAP HEAD SCREW	2		FCM6-16
38	PLASTIC WASHER	4		FWP--001
37	RUBBER GROMMET	2		PMM-008
36	QUIK RIGHT SPATFIN	1		YQC-207R
35	QUIK LEFT SPATFIN	1		YQC-207L
34	6mm SKIFFY CAP	1		PMC-SB6
33	QUIK STATIC PORT	1		ZMS-316
32	M6 X 25 HEX HT BOLT	1		FBM6-25
31	6mm SKIFFY WASHER	1		PMC-RSC6
30	M6 X 90 HEX HT BOLT	1		FBM6-90
29	STRUT LOWER RUBBER GROMMET	1		PMM-018
28	QUIK POD MOUNT SPACER	2		ZSP-046
27	M6 T TYPE NYLOCK NUT	2		FNM6-NT
26	LARGE MAIN PLACARD	1		DP-050
25	'STEP HERE' PLACARD	1		DP-020
24	TYE WRAP STICKY MOUNT	16		HTM-001
23	1/4" STEEL WASHER	14		FW4-T4
22	PAN HEAD SELF TAP SCREW	2		FMSST-001
21	M6 PLASTIC HEX NUT	18		FPN6-10
20	M6 X 16 PLASTIC PAN HEAD SCREW	16		FPS6-16B
19	PLASTIC SPACER	2		FWP-002
18	BLACK EDGE PROTECTOR			PMM-012
17	QUIK FORK SEALING MEMBRANE	1		TQB-17450
16	QUIK APRON	1		YQC-205
15	QUIK INSTRUMENT PANEL	1		YQC-202
14	QUIK DEFLECTOR SCREEN	1		YQC-204
13	QUIK POD	1		YQC-203
12	LOWER KEEP PIN ASSY	1		TQU-12300
11	1/4" SAFETY SPLIT RING	2		FPSR-001
10	M6 X 85 HEX HT BOLT	1		FBM6-85
9	M6 NYLOCK 'T' TYPE	2		FNM6-NT
8	8mm SKIFFY WASHER	8		PMC- SB8
7	8mm SKIFFY CAP BLACK	8		PMC-RSC8
6	STICKY BACK VELCRO- CUT 310mm	1		VW-50-004
5	M X 16 SOCKET HEAD BUTTON SCREW	2		FSM5-16
4	SCREW RIVET- BLACK PLASTIC	4		FMSR-001
3	QUIK FAIRING RIGGING STOP	1		ZMP-128
2	PYLON FAIRING SPACER BRACE	1		ZMP-127
1	QUIK PYLON FAIRING	1		YQC-201

PEGASUS QUIK

SHEET 1 of 3 – PYLON FARING AND FRONT STRUT LOWER

SOLAR WINGS AVIATION Ltd
Elm Tree Park
Manton, Marlborough
Wiltshire SN8 4BY
TEL : 0672 861578

	Date	Name
Drawn	191102	TGS
Approved	21/11/02	
Checked	21/11/02	

SUB-ASSEMBLY | FAIRINGS

Iss.	Description of revision	Date	Approved
C	LANYARD DETAIL	10/05/04	
B	SCREEN EXTENSION	17/11/03	
A	INITIAL ISSUE	191102	

Drawing No. YQC-200

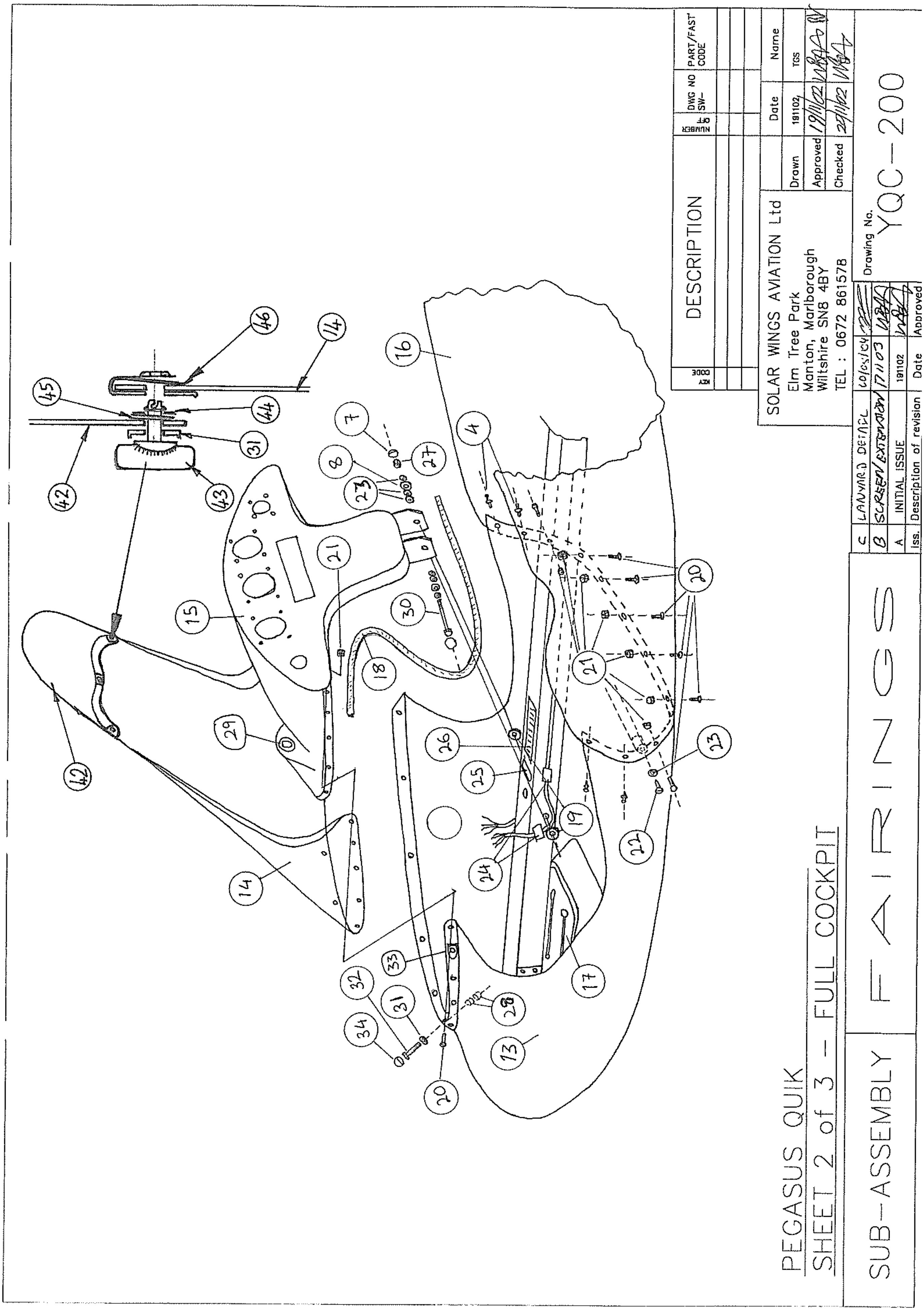
PEGASUS QUIK
SHEET 2 of 3 - FULL COCKPIT
SUB-ASSEMBLY
FAIRINGS
Drawing No.
YQC-200
SOLAR WINGS AVIATION Ltd
Elm Tree Park
Manton, Marlborough
Wiltshire SN8 4BY
TEL : 0672 861578
DESCRIPTION
KEY CODE
NUMBER OFF
DWG NO SW-
PART/FAST CODE
Date
Name
Drawn
181102
TGS
Approved
Checked
C LANYARD DETAIL
B SCREEN EXTENSION
A INITIAL ISSUE
181102
Iss. Description of revision
Date
Approved

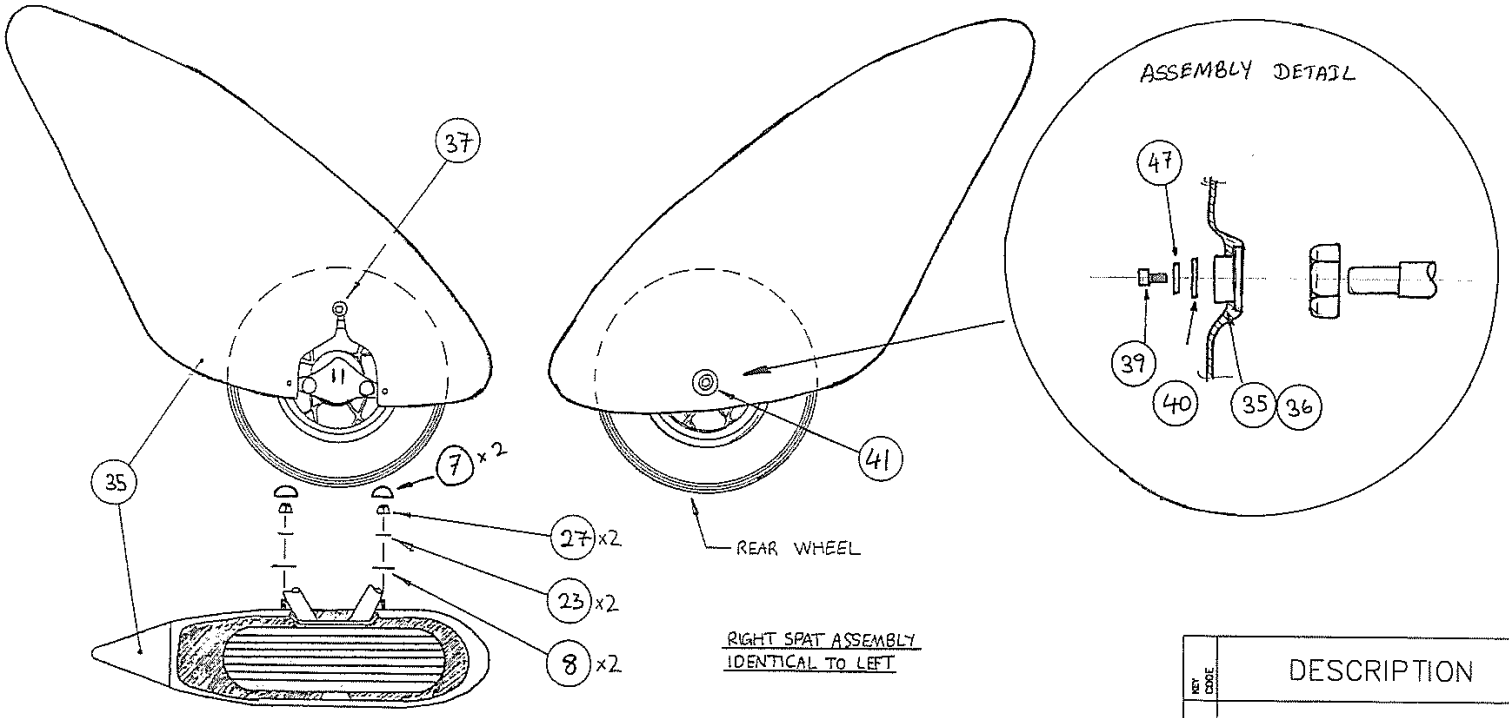

RIGHT SPAT ASSEMBLY
IDENTICAL TO LEFT

KEY CODE	DESCRIPTION	NUMBER OFF	DWG NO SW-	PART/FAST CODE

PEGASUS QUIK
SHEET 3 of 3 – WHEEL SPATFINS

SUB-ASSEMBLY | FAIRINGS

Iss.	Description of revision	Date	Approved
C	LANYARD DETAIL	10/05/04	
B	SCREEN EXTENSION	17/11/03	
A	INITIAL ISSUE	191102	

SOLAR WINGS AVIATION Ltd
Elm Tree Park
Manton, Marlborough
Wiltshire SN8 4BY
TEL : 0672 861578

	Date	Name
Drawn	191102	TGS
Approved	19/11/02	
Checked	20/11/02	

Drawing No. YQC-200

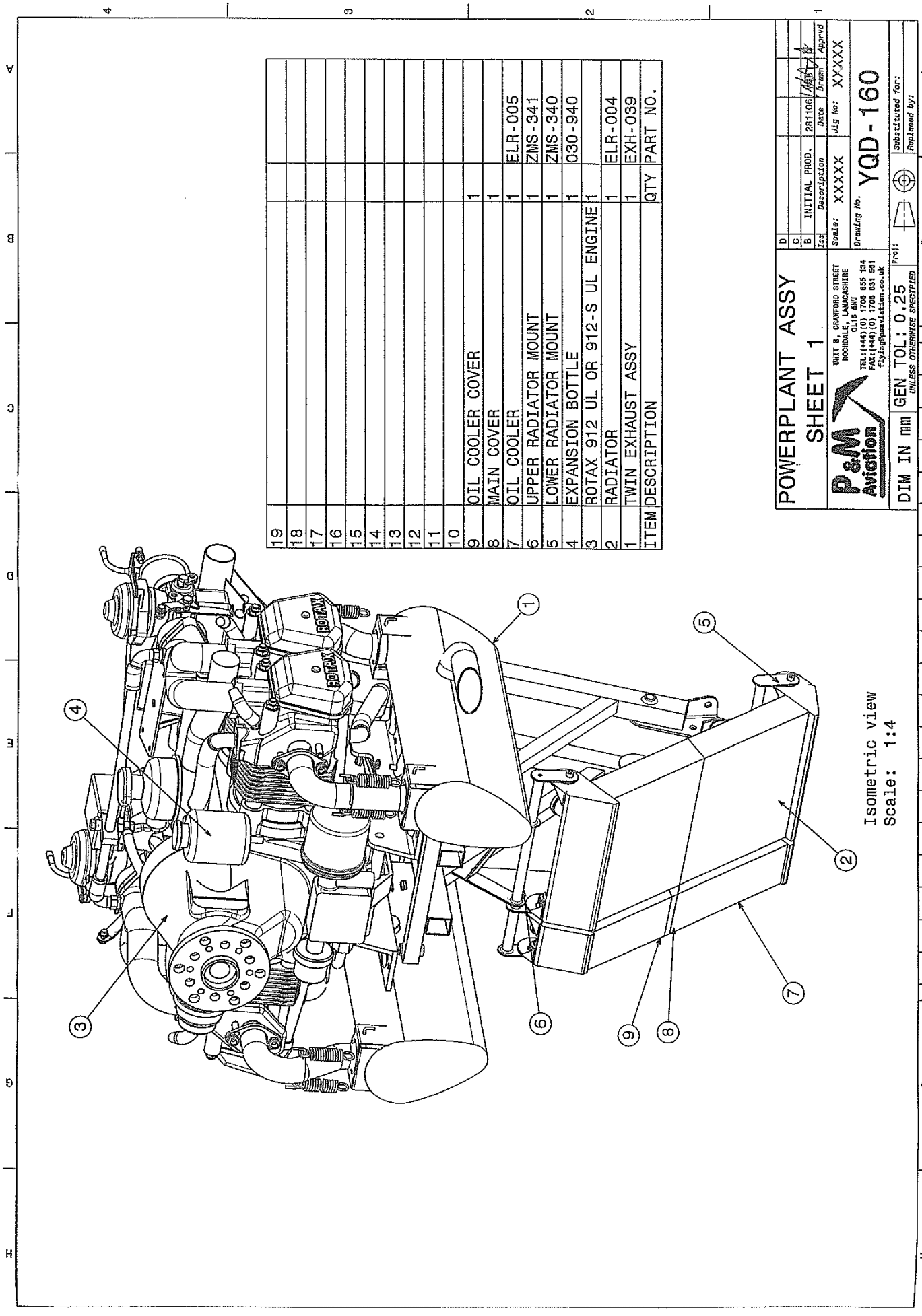

ITEM	DESCRIPTION	QTY	PART NO.
19			
18			
17			
16			
15			
14			
13			
12			
11			
10			
9	OIL COOLER COVER	1	
8	MAIN COVER	1	
7	OIL COOLER	1	ELR-005
6	UPPER RADIATOR MOUNT	1	ZMS-341
5	LOWER RADIATOR MOUNT	1	ZMS-340
4	EXPANSION BOTTLE	1	030-940
3	ROTAX 912 UL OR 912-S UL ENGINE	1	
2	RADIATOR	1	ELR-004
1	TWIN EXHAUST ASSY	1	EXH-039

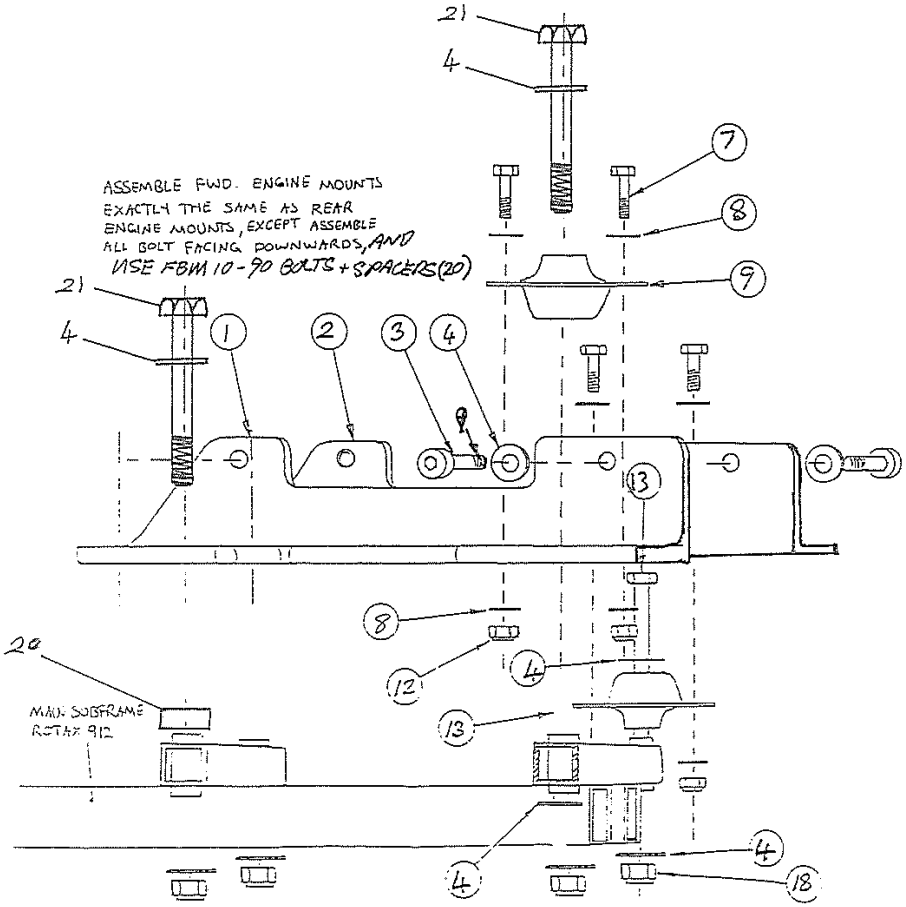

21	10mm x 90 BOLT	2	FBM10-90
20	10MM SPACER	2	032-315
19			
18	M10 T TYPE NYLOC NUT		FNM10-NT
16			
15			
14			
13	M10 X 80 HEX BOLT	2	FBM10-80
12	M8 T TYPE NYLOC NUT	8	FNM8-NT
10			
9	METALASTIK MOUNT	4	100640
8	M8 WASHER	16	FWM8-B
7	M8 X 20 HEX BOLT	8	FBM8-20
6	M10 T TYPE NYLOK NUT	4	FNM10-NT
4	M10 WASHER	20	FWM10-B
3	M10 X 35 CAP HEAD BOLT	4	FBM10-35
2	ENGINE MOUNT ANGLE RH	1	
1	ENGINE MOUNT ANGLE LH	1	
ITEM	DESCRIPTION	QTY	PART NO

SHEET 2 OF 8

C			
B		28/11/06	
A	INITIAL ISSUE	31/10/06	
Iss.	Description of revision	Date	Approved

	Date	Name
Drawn	31/10/06	
Checked	29/11/06	

DIM. IN mm | SCALE NTS
GEN. TOL. +- 0.5
PROJ

SUB-ASSEMBLY

POWERPLANT SUB ASSEMBLY

912 S (OIL COOLER AND CHANEL MOUNTS)

PEGASUS AVIATION

Drawing No. YQD-160

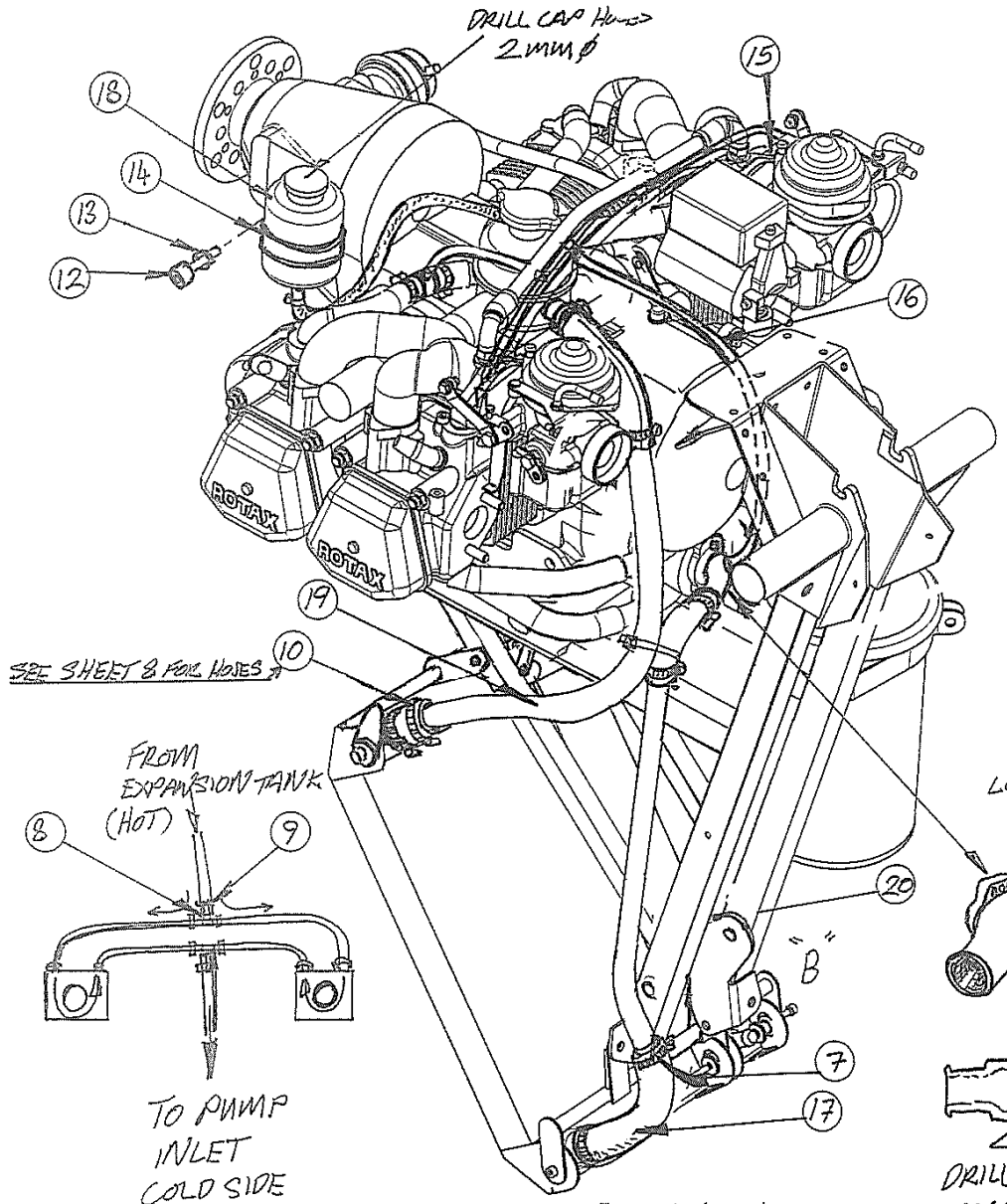

Isometric view
Scale: 1:4

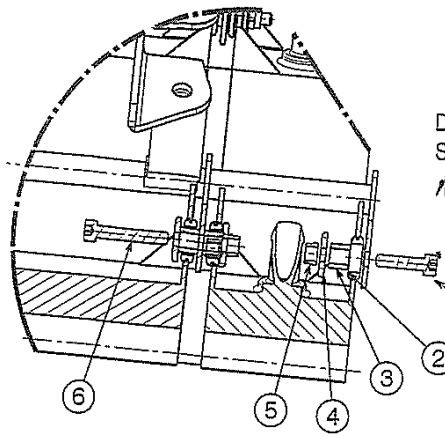

Detail B
Scale: 1:2
NOTE: BOTTOM MOUNT SHOWN. TOP MOUNT FITS INSIDE LUGS.

No.	Description	Qty	Material	Part No.
23	SEALING WASHER	1		
22	1/4" HOSE NIPPLE 5mm BORE	1	BSP OR NPT	
21	COOLANT BOTTLE HOSE	0.4m	RUBBER/FABRIC	EFLH-3
20	RAD. BOTTOM PIPE	1	6082 1" 17SWG	ZMA-171
19	RAD. HEADER PIPE	1	6082 1" 17SWG	ZMA-172
18	COOLANT BOTTLE	1		030-940
17	25mm BORE BEAU HOSE	4	RUBBER/FABRIC	030-909
16	1/4" BORE HOSE	3m		EFLH-002
15	CARB HEAT BLOCK	2	ALLY SHRINK FIT	SHROUD MK II
14	STRAP COOL BOTTLE	1	STAINLESS STEEL	ZMS-335
13	M10 SPRING WASH'R	1		FWM10-SW
12	M10 CAP HEAD SCREW	1		FCM10-20
11	CARBHEAT INLET TAPPING	1		PPCH-003
10	25mm BORE HOSE	0.1m	RUBBER/FABRIC	EFTC-7
9	HOSE CLAMP	12		HCM12-001
8	METAL 1/4" TEE	2	STEEL PLATED	EFLC-008
7	HOSE CLAMP 25-35mm	12	S/STEEL	HCJ-006
6	M5 BOLT x20	2		FBM5-30
5	M5 T NYLOC	8		FNM5-NT
4	M5 x16 WASHER	8		FW3-12
3	BUSH	8		ZMS-311
2	GROMMET	8		PMM-008
1	M5 BOLT x20	4		FBM5-20

POWERPLANT ASSY
SHEET 3 OF 8

Iss	Description	Date	Drawn	Apprvd
C				
B	PIPE ROUTE	281106		
A	INITIAL	311006		

P&M Aviation
UNIT B, CRAWFORD STREET
ROCHDALE, LANACASHIRE
OL16 5NU
TEL: (+44) (0) 1706 655 134
FAX: (+44) (0) 1706 631 561
flying@pmaviation.co.uk

Scale: XXXXX
Jig No: XXXXX
Drawing No. YQD-160

DIM IN mm | GEN TOL: 0.25 UNLESS OTHERWISE SPECIFIED | Proj:

Substituted for:
Replaced by:

MIXTURE CONTROL QTM/QUIK 912 (S) – MODIFICATION OF RIGHT HAND CARBURATOR

1. REMOVE DIAPHRAGM COVER, DIAPHRAGM SLIDER FLOAT BOWL AND FLOATS
2. MARK OFF CENTRE OF COUNTERBORED HOLE ON SURFACE AS SHOWN TO DIMENTIONS
3. THROUGH DRILL 3.0 TO VENTURI (TAKE CARE NOT TO STRIKE NEEDLE JET WITH DRILL TIP)
4. COUNTER BORE 5.0 TO DEPTH 10mm
5. TAP M6 X 1.0 THREAD TO DEPTH 10mm
6. DEBURR AND CLEAR ANY SWARF FROM DRILLING AND TAPPING
7. RE ASSEMBLE CARB
8. SCREW ZMS-285 (M6 NIPPLE) INTO TAPPED HOLE WITH LOCTITE 221 TO RETAIN FITTING

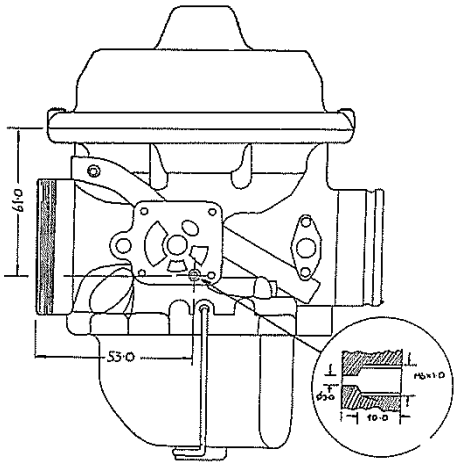

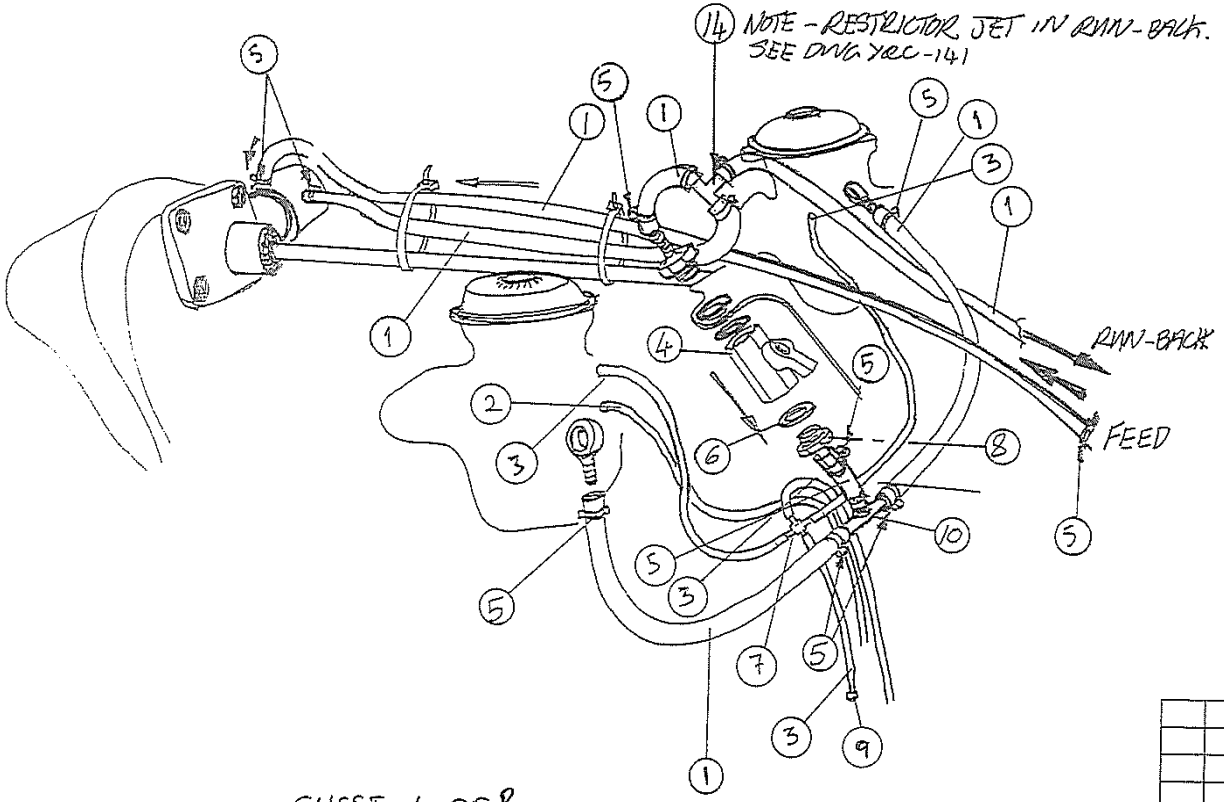

14	RESTRICTOR TEE BYPASS	1	YOC-141
13	M6 NIPPLE	1	ZMS-285
12	260MM WHITE TY WRAPS	5	HTW-003
11	100MM BLACK TY WRAPS	10	HTW-002
10	STEEL 'T' PIECE	2	EFLC-8
9	RESTRICTOR JET FROM MIXTURE CONTROL KIT	1	–
8	1/4" BSP SPIGOT	2	EFLC-2
7	CROSS UNION FROM MIXTURE CONTROL KIT	1	–
6	FIBRE WASHER	3	HTW-001
5	HOSE CLAMP	12	HCM12-001
4	FUEL TAP	1	EFLC-3
3	CARBURATOR VENT TUBE		PT12-001
2	STATIC SOURCE TUBE		EFLH-007
1	FUEL HOSE		EFLH-002

SHEET 4 OF 8.

C			
B		28/11/06	
A	INITIAL ISSUE	31/10/06	WBA
Iss	Description of revision	Date	Approved

	Date	Name
Drawn	31/10/06	WBA
Checked	29/11/06	

DIM. IN mm | SCALE NTS | PROJ
GEN TOL +– 0.5

PEGASUS AVIATION

Drawing No. YOD – 160

SUB–ASSEMBLY

POWERPLANT SUB ASSEMBLY

912 S (FUEL AND MIXTURE CONTROL SYSTEM)

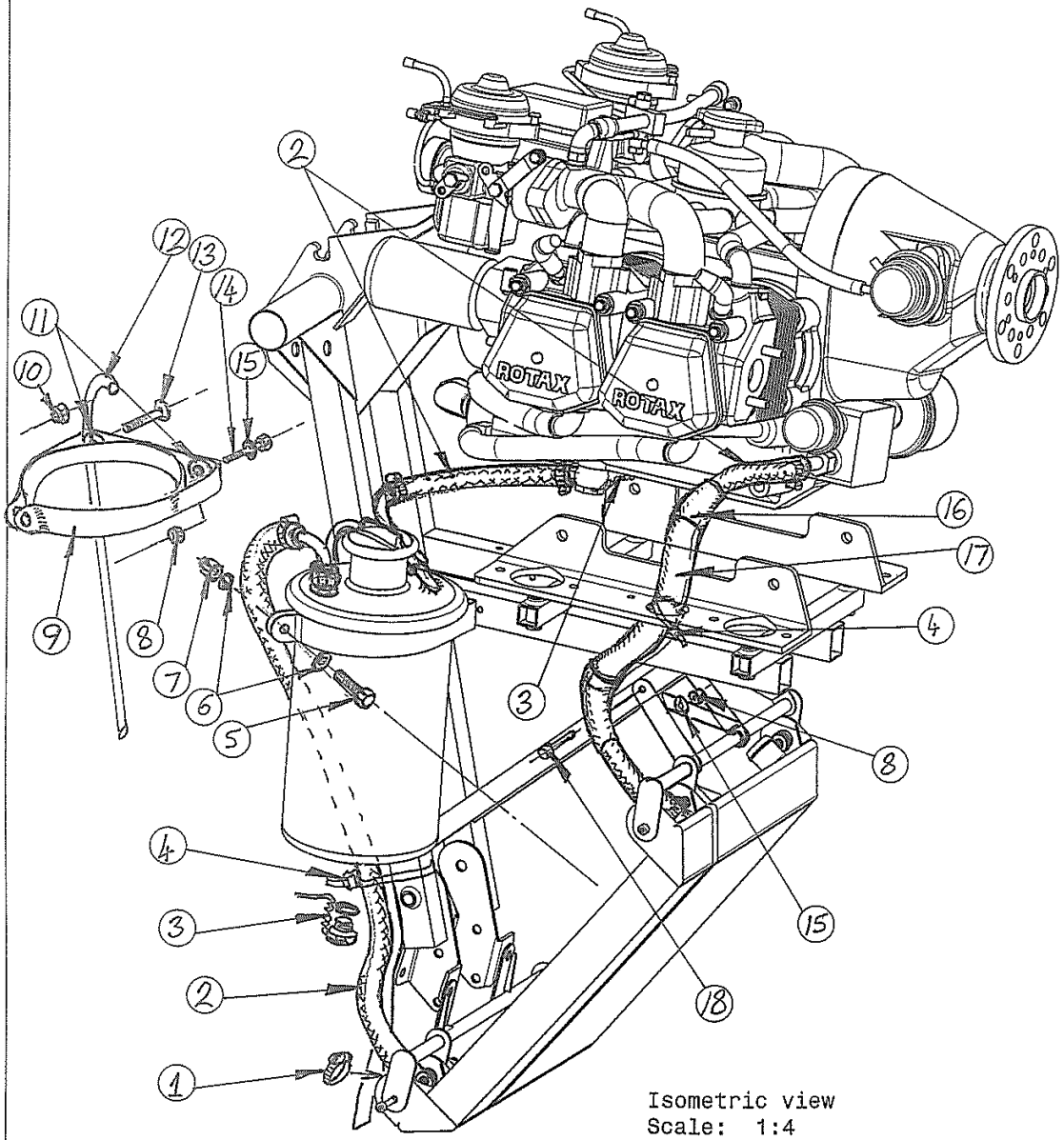

Isometric view
Scale: 1:4

No.	Description	Qty	Material	Part No.
30				
29				
28				
27				
26				
25				
24				
23				
22				
21				
20				
19				
18	M5 x 30 HEX BOLT	2	ZINC PLATED STEEL	FBM5-30
17	FIRESLEEVE	0.2	SILICONE/GLASS	ELH-004
16	HEAT SHRINK	0.2		
15	M5 WASHER	3	ZINC/STEEL	FWM5-B
14	M5 x 35 HEX BOLT	1	ZINC/STEEL	FBM5-35
13	C/SUNK M6 SCREW	1	ZINC/STEEL	FMS6-40
12	BREATHER TUBE	0.4m	TYGON P/U	EFLH-8
11	M6 WASHER	2	ZINC/STEEL	FW4-12
10	M6 T TYPE NYLOC	1	ZINC/STEEL	FNM6-NT
9	OIL BOTTLE CLAMP	1	WHITE P/COAT STEEL	TQB-15275
8	M5 P TYPE NYLOC	3	ZINC PLATE STEEL	FNM5-NP
7	M8 P TYPE NYLOC	1	ZINC PLATED STEEL	FNM8-NP
6	M8 WASHER	1		FWM8-B
5	M8 x 8.8 HEX BOLT	1	M 8.8 ZINC PLATED	FBM8-30
4	TYWRAP	2	BLACK NYLON	HTW-006
3	WIRE LOCKING	0.2m	MONEL	RW-SW
2	OIL HOSE 1/2" BORE	≈2m	RUBBER (SYNTH)	858-390
1	HOSE CLAMP 25-35mm	6	STEEL PLATED OR SS	HCJ-002

POWERPLANT ASSY
SHEET 5

Iss	Description	Date	Drawn	Apprvd
C				
B	TOP BRKT	281106	[illegible]	[illegible]
A	INITIAL	311006	[illegible]	[illegible]

P&M Aviation
UNIT B, CRAWFORD STREET
ROCHDALE, LANACASHIRE
OL16 5NU
TEL:(+44)(0) 1706 855 134
FAX:(+44)(0) 1706 831 561
flying@pmaviation.co.uk

Scale: XXXXX
Jig No: XXXXX
Drawing No. YQD-160

DIM IN mm
GEN TOL: 0.25
UNLESS OTHERWISE SPECIFIED
Proj:
Substituted for:
Replaced by:

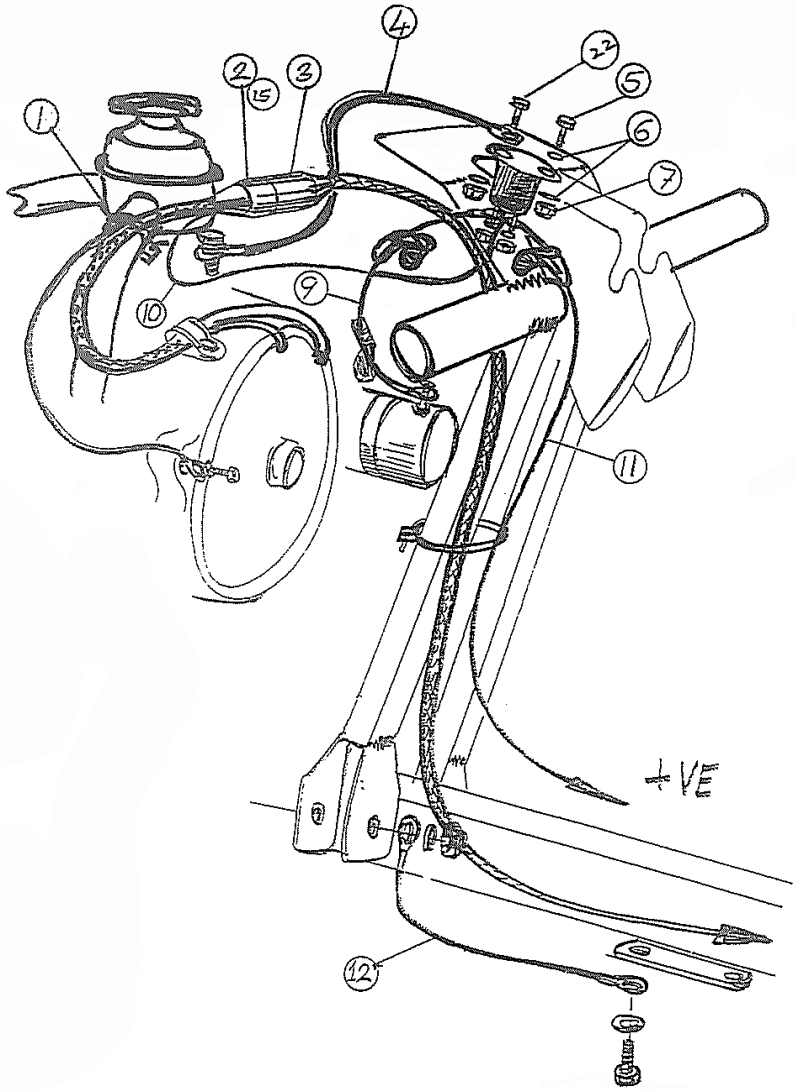

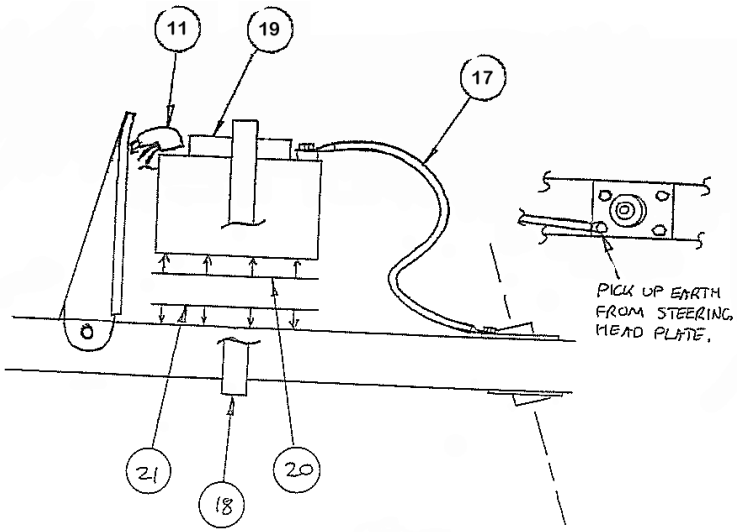

ITEM	DESCRIPTION	QTY	PART NO
22	6mm Hex Bolt	1	FBM6-20
21	VELCRO 50mm HOOK	150mm	VW50-044
20	VELCRO 50mm LOOP	150mm	VW50-004
19	BATTERY	1	LB-004
18	BATTERY STRAP	1	TQB-18150
17	EARTH CABLE	1	LC-029
15	CRIMP CONTACTS	10	LT-012
12	EARTH STRAP	1	LC-030
11	SOLENOID POWER CABLE	1	LC-050
10	SOLENOID LEAD	1	LC-012
9	STARTER MOTOR CABLE	1	LC-031
7	6mm NYLOC NUT	2	FNM6-NT
6	6mm WASHER	4	FW4-T3
5	6mm HEX BOLT	1	FBM6-16
4	EARTH STRAP	1	LC-032
3	LOOM	1	TQU-16534
2	CONNECTOR PLUG	1	LT-008
1	CABLE TIE	5	HTW-002

SHEET 6 OF 8

C			
B		28/11/06	
A	INITIAL ISSUE	31/10/06	
Iss	Description of revision	Date	Approved

	Date	Name
Drawn	31/10/06	
Checked	29/11/06	

DIM. IN mm SCALE: NTS
GEN TOL +- 0.5
PROJ

PEGASUS AVIATION

Drawing No YQD-160

SUB-ASSEMBLY

POWERPLANT SUB ASSEMBLY

912 S (BATTERY AND ELECTRICS)

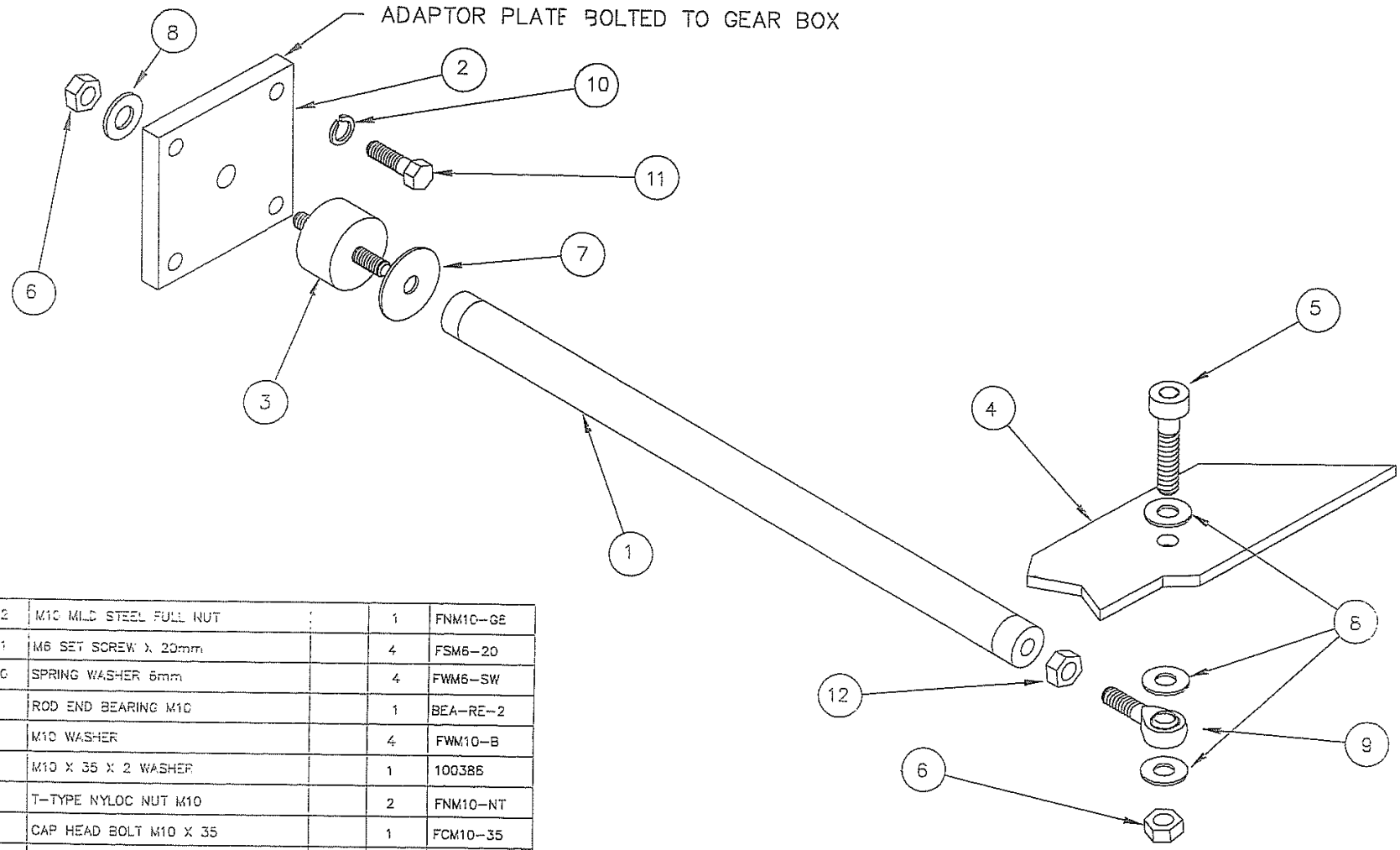

Number	DESCRIPTION / MATERIAL	DRW.NO.	Quantity	PART NO/ MAT CODE
12	M10 MILD STEEL FULL NUT		1	FNM10-GE
11	M6 SET SCREW X 20mm		4	FSM6-20
10	SPRING WASHER 6mm		4	FWM6-SW
	ROD END BEARING M10		1	BEA-RE-2
8	M10 WASHER		4	FWM10-B
7	M10 X 35 X 2 WASHER		1	100386
6	T-TYPE NYLOC NUT M10		2	FNM10-NT
5	CAP HEAD BOLT M10 X 35		1	FCM10-35
4	MAIN SUB FRAME (PART OF)			ZMS-253
3	RUBBER MOUNT		1	EVI-007
2	912 THRUST LINK ADAPTOR PLATE	90499	1	ZMS-262
1	ENGINE THRUST LINK 912	90492	1	ZMS-258

NOTE: USE A MILD THREAD LOCK ON ALL THREADS NOT FIXED WITH NYLOC NUTS

SHEET 7 OF 8

Iss.	Description of revision	Date	Approved
C			
B		25/11/06	
A	INITIAL ISSUE	31/10/06	

DIM. IN mm | SCALE: NTS
GEN TOL. +- 0.5
PROJ: 3a

	Date	Name
Drawn	31/10/06	
Checked	29/11/06	

PEGASUS AVIATION

Drawing No. YQD-160

SUB-ASSEMBLY ENGINE THRUST LINK

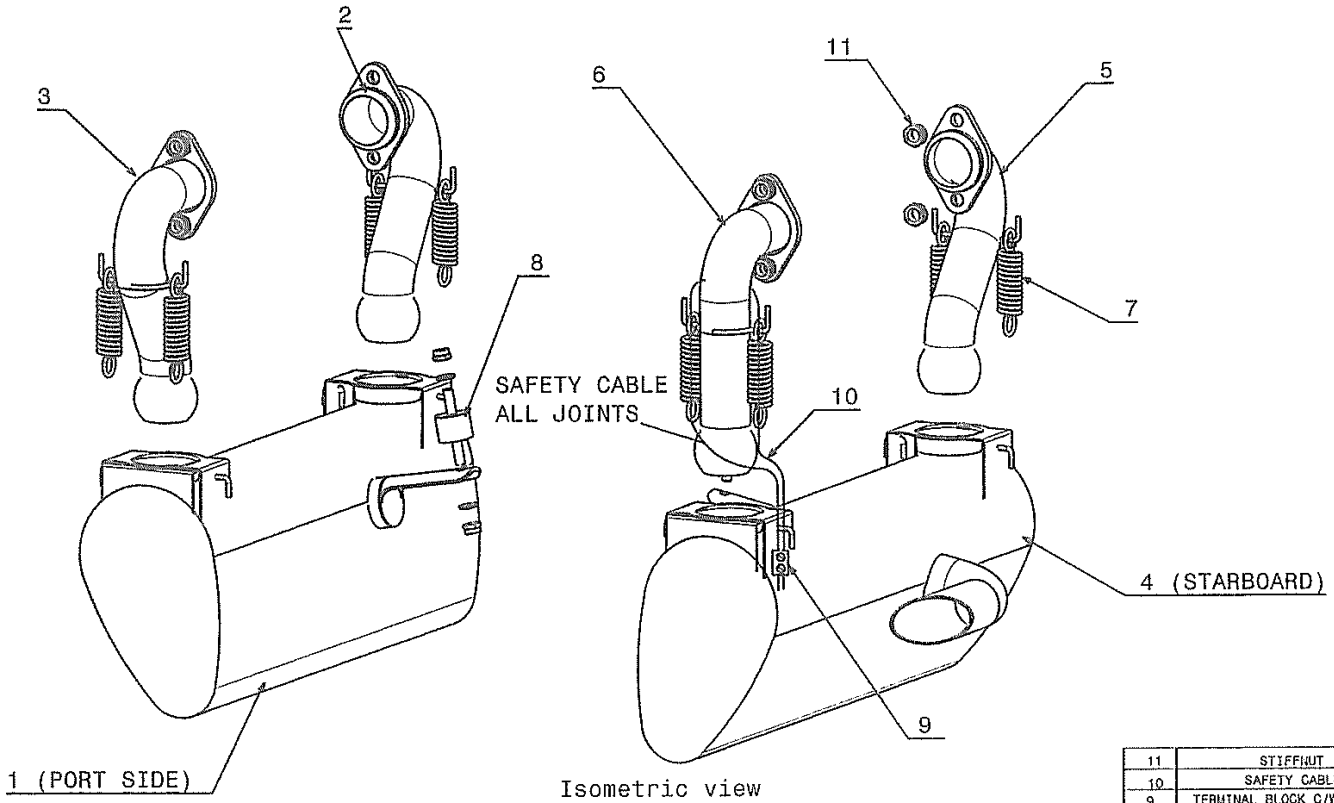

Isometric view
Scale: 1:3

No.	Description	Qty	Material	Weight	Part No.
11	STIFFNUT	8	STEEL,PLATED		842-950
10	SAFETY CABLE	1M	STAINLESS STEEL		RWSS-1.5
9	TERMINAL BLOCK C/W SCREWS	4	BRASS		
8	AV MOUNT C/W M6 NYLOC NUTS	2	STEEL/RUBBER	70	RNT-1
7	SPRING	8	STAINLESS STEEL	30	06-657
6	STARBOARD REAR DOWNPIPE	1	STAINLESS STEEL	310	73-337-2030
5	STARBOARD FRONT DOWNPIPE	1	STAINLESS STEEL	310	72-414-2030
4	STARBOARD SILENCER	1	STAINLESS STEEL	1970gr	87-2030
3	PORT REAR DOWNPIPE	1	STAINLESS STEEL	310	71-363-2029
2	PORT FRONT DOWNPIPE	1	STAINLESS STEEL	310	70-398-2029
1	PORT SILENCER	1	STAINLESS STEEL	1970gr	87-2029

TWIN EXHAUST ASSY

Iss	Description	Date	Appr'd
C	XXX	XXXXXX	
B	XXX	XXXXXX	
A	MOD 162	300606	WGBROOKS

P&M AVIATION
UNIT B CRAWFORD ST
ROCHDALE, LANCS
01706655134

	Date	Name
Drawn	300606	WGBROOKS
Apprvd	300606	WGBROOKS
Checked	XXXXXX	XXX

Scale: NTS | Jig No: N/A
Drawing No. EXH-039

DIM IN mm | GEN TOL: N/A UNLESS OTHERWISE SPECIFIED | Proj: | Substituted for: | Replaced by:

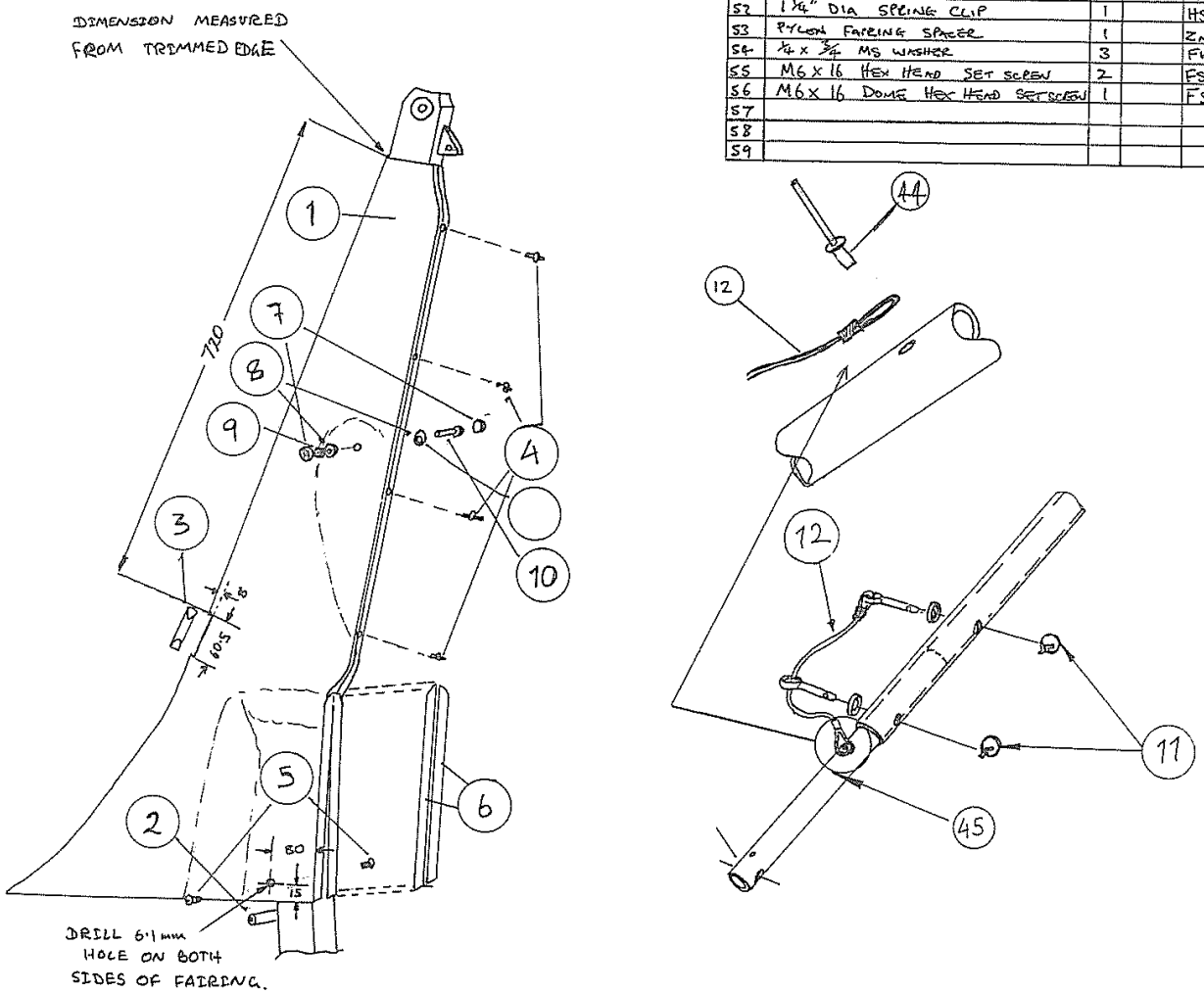

KEY CODE	DESCRIPTION	QTY	DRWG NO	PART CODE
50	POD SUPPORT BRACKET	1		ZMS-332
51	M5 x 16 DOMEHEADED STAINLESS SCREW	2		FSM5-16SS
52	1¼" DIA SPRING CLIP	1		HS-018
53	PYLON FAIRING SPACER	1		ZMP-127
54	¼ x ⅜ MS WASHER	3		FW4-12
55	M6 x 16 HEX HEAD SET SCREW	2		FSM6-16
56	M6 x 16 DOME HEX HEAD SETSCREW	1		FSDM6-16
57				
58				
59				

KEY CODE	DESCRIPTION	NUMBER OFF	DWG NO SW-	PART/FAST CODE
49	334-350-190 DZUS SUPON RELEP	4		FMSZ-003
48	314-374-190 DZUS WING TYPE STUD	4		FMSZ-001
47	5mm S.COIL SPRING WASHER			FWM5-SW
46	12mm M/S FORM 'C' WASHER	2		FWM12-C
45	FRONT STRUT LOWER COMPLETE	1		TQU-12200
44	3/16 x 3/8 MONEL POP RIVET	1		FR6-12-001
43	M5 FORM 'B' WASHER	2		FWM5-B
42	WINDSCREEN UPPER SECTION	1		YQD-204U
41	PLASTIC SPAT BUSH	2		ZMP-072
40	3/16 STEEL WASHER	2		FW3-12
39	M5 CAP HEAD SCREW	2		FCM5-16
38	PLASTIC WASHER	6		FWP--001
37	RUBBER GROMMET	2		PMM-008
35	QUIK RIGHT SPATFIN	1		YQC-207R
35	QUIK LEFT SPATFIN	1		YQC-207L
34	6mm SKIFFY CAP	1		PMC-SB6
33	QUIK STATIC PORT	1		ZMS-316
32	M6 X 25 HEX HT BOLT	1		FBM6-25
31	6mm SKIFFY WASHER	1		PMC-RSC6
30	M6 X 90 HEX HT BOLT	1		FBM6-90
29	STRUT LOWER RUBBER GROMMET	1		PMM-018
28	QUIK POD MOUNT SPACER	2		ZSP-046
27	M6 T TYPE NYLOCK NUT	2		FNM6-NT
26	LARGE MAIN PLACARD	1		DP-050
25	STEP HERE PLACARD	1		DP-020
24	TYE WRAP STICKY MOUNT	16		HTM-001
23	1/4" STEEL WASHER	15		FW4- TH
22	PAN HEAD SELF TAP SCREW	2		FMSST-001
21	M6 PLASTIC HEX NUT	18		FPN6-10
20	M6 X 16 PLASTIC PAN HEAD SCREW	16		FPS6-16B
19	PLASTIC SPACER	2		FWP-002
18	BLACK EDGE PROTECTOR			PMM-012
17	QUIK FORK SEALING MEMBRANE	1		TQB-17450
16	QUIK APRON	1		YQC-205
15	QUIK INSTRUMENT PANEL	1		YQC-202
14	WINDSCREEN LOWER SECTION	1		YQD-204 L
13	QUIK POD	1		YQC-203
12	LOWER KEEP PIN ASSY	1		TQU-12300
11	1/4" SAFETY SPLIT RING	2		FPSR-001
10	M6 X 85 HEX HT BOLT	1		FBM6-85
9	M6 NYLOCK 'T' TYPE	5		FNM6-NT
8	8mm SKIFFY WASHER	9		PMC- SB8
7	8mm SKIFFY CAP BLACK	9		PMC-RSC8
6	STICKY BACK VELCRO- CUT 310mm	1		VW-50-004
5	M5 X 16 SOCKET HEAD BUTTON SCREW	2		FSM5-16
4	SCREW RIVET- BLACK PLASTIC	4		FMSR-001
3	QUIK FAIRING RIGGING STOP	1		ZMP-128
2	PYLON FAIRING SPACER BRACE	1		ZMP-127
1	QUIK PYLON FAIRING	1		YQC-201

PEGASUS QUIK - GT450

SHEET 1 of 3 – PYLON FARING AND FRONT STRUT LOWER

SOLAR WINGS AVIATION Ltd
Elm Tree Park
Manton, Marlborough
Wiltshire SN8 4BY
TEL : 0672 861350

	Date	Name
Drawn	9/11/05	RK
Approved	9/11/05	
Checked	9/11/05	

SUB-ASSEMBLY | FAIRINGS

Iss.	Description of revision	Date	Approved
A	INITIAL ISSUE	9/11/05	

Drawing No. YQD-200

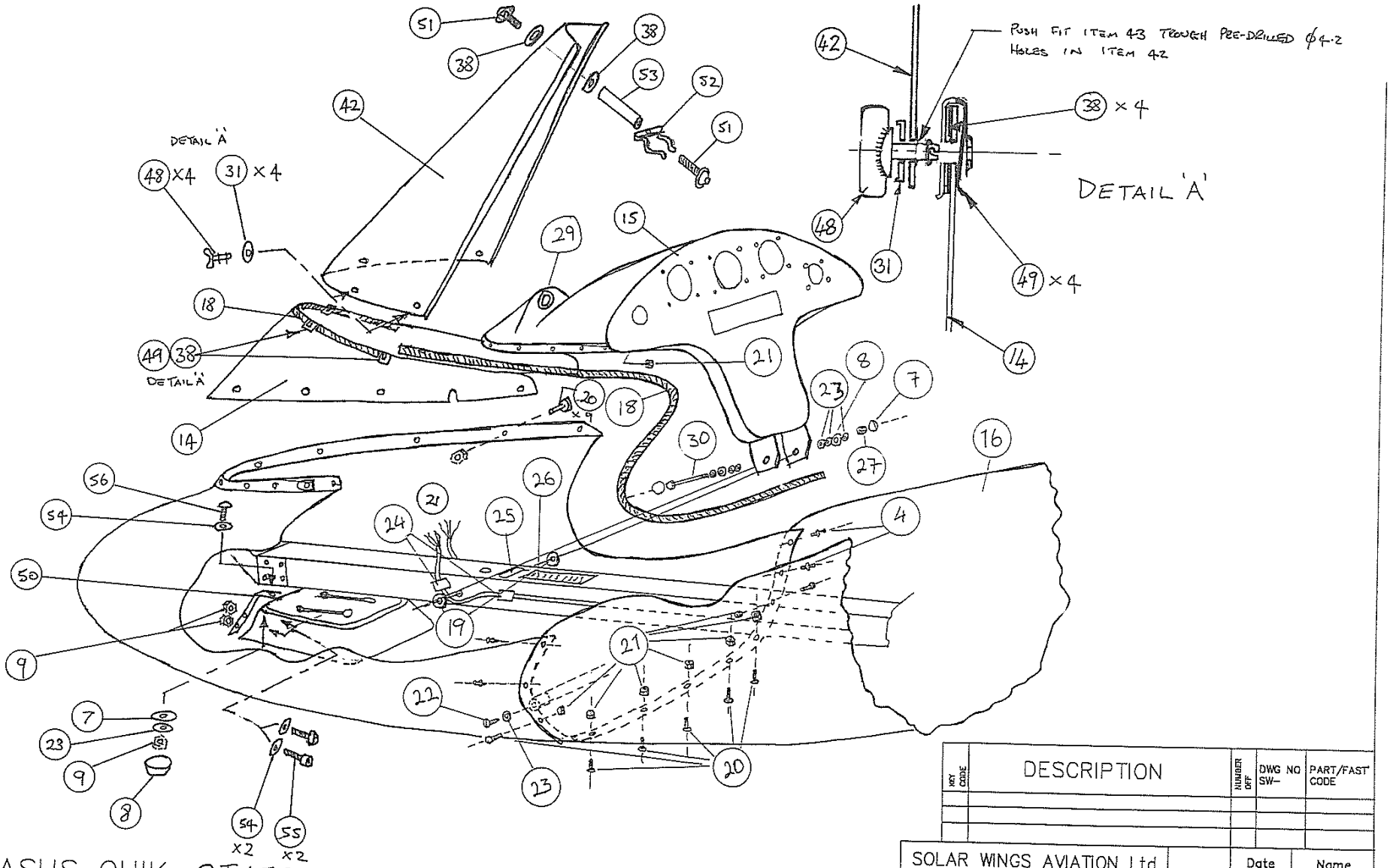

KEY CODE	DESCRIPTION	NUMBER OFF	DWG NO SW–	PART/FAST CODE

PEGASUS QUIK-GT450
SHEET 2 of 3 – FULL COCKPIT

SOLAR WINGS AVIATION Ltd
Elm Tree Park
Manton, Marlborough
Wiltshire SN8 4BY
TEL : 0672 861350

	Date	Name
Drawn	9/11/05	RK
Approved	9/11/05	
Checked	9/11/05	

SUB–ASSEMBLY | FAIRINGS

A	INITIAL ISSUE	9/11/05	

Drawing No. YQD–200

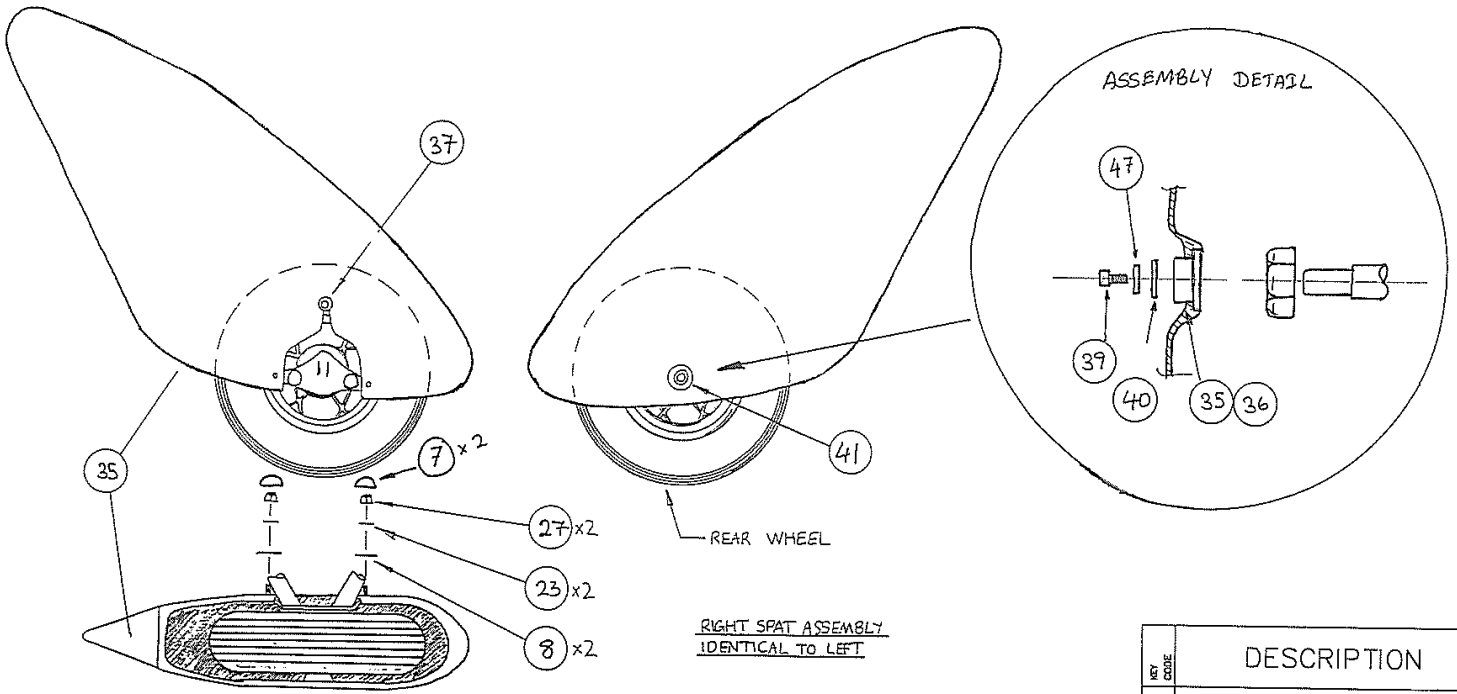

RIGHT SPAT ASSEMBLY
IDENTICAL TO LEFT

KEY CODE	DESCRIPTION	NUMBER OFF	DWG NO SW-	PART/FAST CODE

PEGASUS QUIK- GT450
SHEET 3 of 3 – WHEEL SPATFINS

SUB–ASSEMBLY | FAIRINGS

SOLAR WINGS AVIATION Ltd
Elm Tree Park
Manton, Marlborough
Wiltshire SN8 4BY
TEL : 0672 861350

	Date	Name
Drawn	9/11/05	RK
Approved	9/11/05	
Checked	9/11/05	

A	INITIAL ISSUE	9/11/05	

Drawing No.
YQD–200

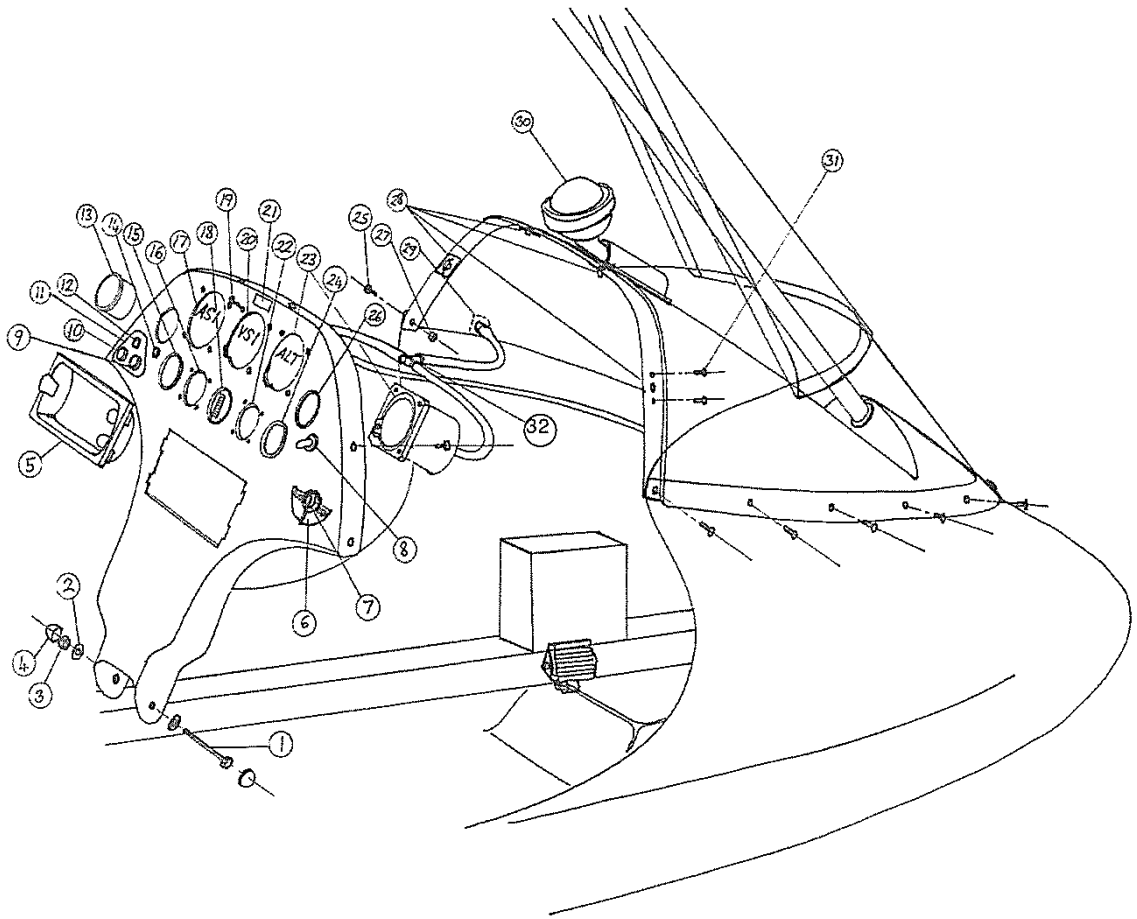

No.	Description	Qty	Material	Weight	Part No.
34					
33					
32	PLASTIC TEE	1			EFLC-01
31	3/32" CSK RIVET	8			FR6-001
30	SILVA COMPASS & MOUNT	1			041-025
29	STATIC PORT	1			ZMS-316
28	M6 NUTPLATE	4			FNS-9
27	M6 NYLON NUT	2			FPN6-10
26	OIL TEMPERATURE	1			IEWT-3
25	M6 NYLON SCREW	15			FPS6-16BLACK
24	OIL PRESSURE	1			043-175
23	ALTIMETER	1			IFALF-4
22	TACHOMETER	1			IER-PM12
21	FUEL LOADING PLACARD	1			DP-075
20	VSI	1			IFVSI-3
19	INSTRUMENT SCREW	10			
18	EGT GAUGE	1			IEEGT-3
17	ASI	1			IFASI-9
16	CHT GAUGE	1			IEW3T
15	TRIM INDICATOR	1			YQC-099
14	5A TRIM CIRCUIT BRKR	1			LCB-001
13	FUEL GAUGE	1			EFG-9
12	BSM VOLTMETER	1			IEBSM-2
11	PLACARD	1			DP-079
10	KEY MASTER SWITCH	1			LS-006
9	STARTER SWITCH	1			LS-007
8	AND COVER	1			LS002 & 003
7	MIXTURE PLACARD	1			DP-076
6	LEAN CONTROL	1			MIXTURE CONTROL KIT
5	AIRGIZMO GPS MOUNT	1			
4	M8 SKIFFY CAP	2			PMC-RSC8
3	M6 THIN NYLOC NUT	1			FNM8-NT
2	M8 SKIFFY WASHER	2			PMC-SB8
1	M6 HEX HEAD BOLT	1	M8.8		FBM6-85

INSTRUMENT PANEL ASSEMBLY

Iss	Description	Date	Drawn	Apprvd
C				
B				
A	INITIAL	190907	WGB	

P&M Aviation
UNIT B, CRAWFORD STREET
ROCHDALE, LANACASHIRE
OL16 5HU
TEL:(+44)(0) 1706 655 134
FAX:(+44)(0) 1706 631 561
flying@pmaviation.co.uk

Scale: XXXXX Jig No: XXXXX

Drawing No. YQD-201 PANELASSY

DIM IN mm | GEN TOL: XXXXX UNLESS OTHERWISE SPECIFIED | Proj:

Substituted for:
Replaced by:

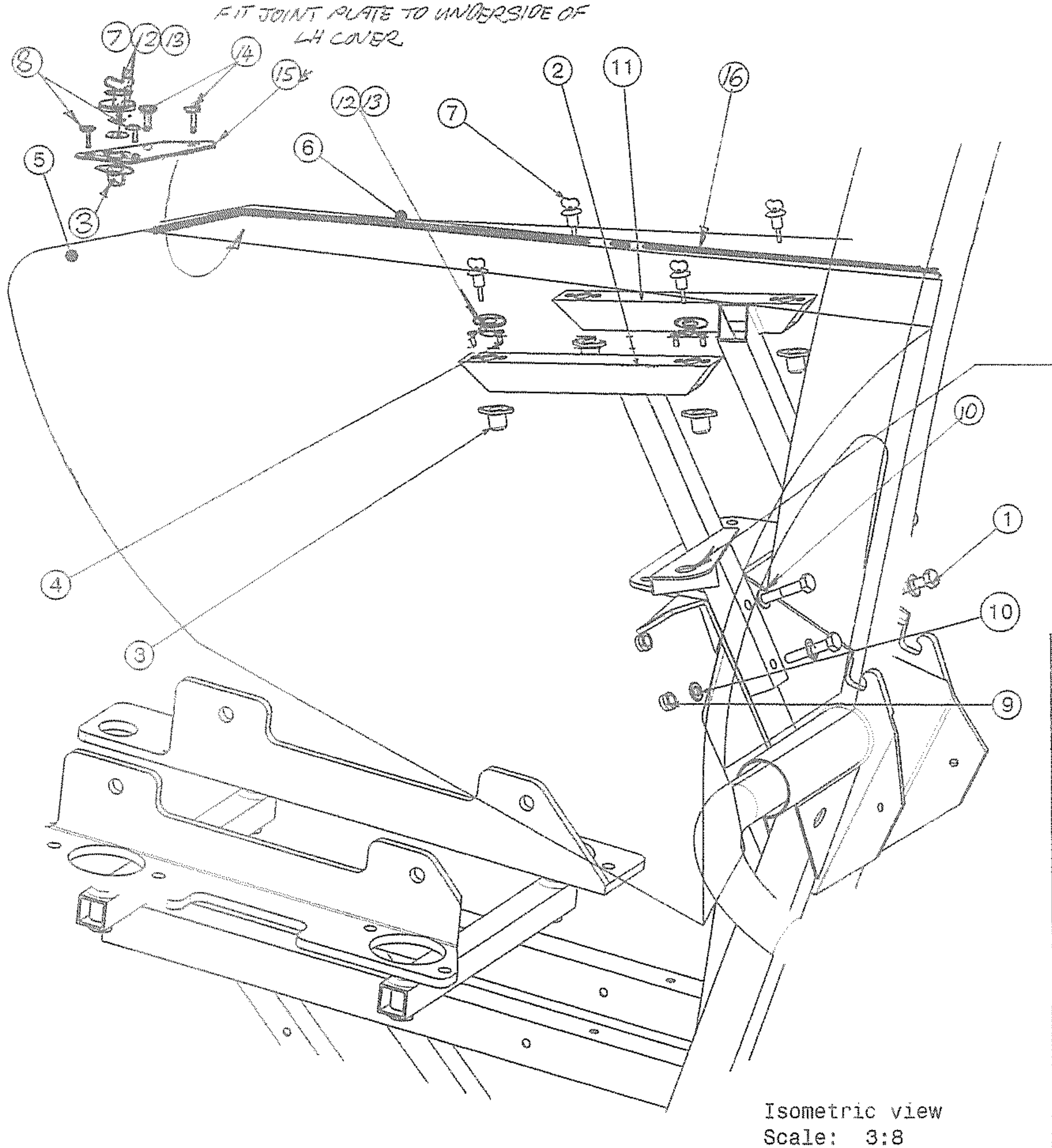

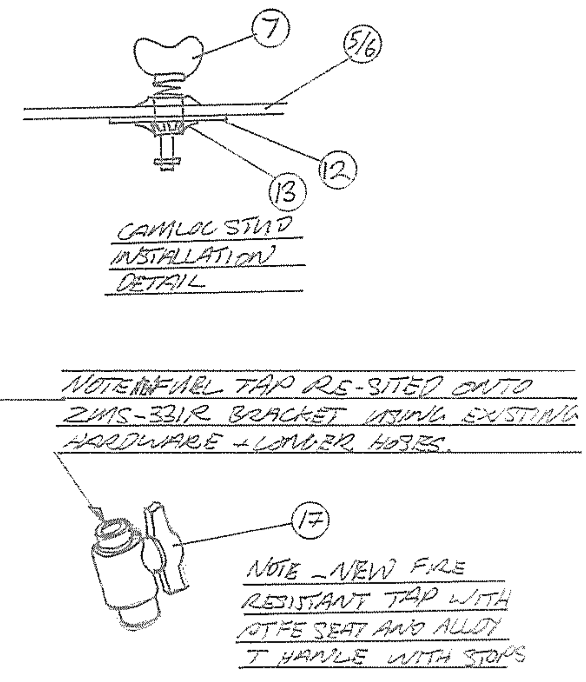

No.	Description	Qty	Material	Weight	Part No.
17	TAP VIBAMA 1/4 BSP VALVE	1	PTFE SEAT ALLY T HANDLE	120G	EFLC-23
16	EDGING STRIP	1m	STEEL/PLASTIC		PMM-012
15	JOINT PLATE	1	2MM 6082-T6		ZPL-151
14	RIVET	2	MONEL		FR6-001
13	RETAINING SPRING WASH	5	SPRING STEEL PASS		FMSL-002
12	PLASTIC WASHER	5	NYLON OR HDPE		FNP-001
11	LH ENGINE COVER BRKT	1	3/4" 18SWG BOX		ZMS-331L
10	M6 WASHER	8	STEEL PASSIVATED		FW6-T3
9	M6 THIN NYLOC	4	STEEL PASSIVATED		FNM6-NT
7	CAMLOC WING STUD	5	STEEL PASSIVATED		FMSL-001
6	LH ENGINE COVER	1	GRP (FIRE RET'D)		YQD-22L
5	RH ENGINE COVER	1	GRP (FIRE RETD)		YQD-22R
4	1/8" x 5/32" 120° CSK RIVET	10	MONEL		FR3-2 (M02)
3	CAMLOC RECEPTACLE	5	BRONZE	XXXX	FMSL-003
2	RH ENGINE COVER BRKT	1	3/4" 18SWG BRW BOX	XXXX	ZMS-331R
1	M6 x 35 HEX BOLT	4	M8.8 PASSIVATED	XXXX	FBM635

ENGINE COVER
ASSY

Iss	Description	Date	Drawn	Approvd
C				
B				
A	INITIAL	271005		

P&M Aviation
UNIT B, CRAWFORD STREET
ROCHDALE, LANCASHIRE
OL16 5NU
TEL:(+44)(0) 1706 655 134
FAX:(+44)(0) 1706 631 561
flying@pmaviation.co.uk

Scale: XXXXX
Jig No: XXXXX
Drawing No. YQD-220

DIM IN mm
GEN TOL: .05
UNLESS OTHERWISE SPECIFIED
Proj:
Substituted for:
Replaced by: